NET4GAS GROUP CONSOLIDATED ANNUAL REPORT 2018

NET4GAS

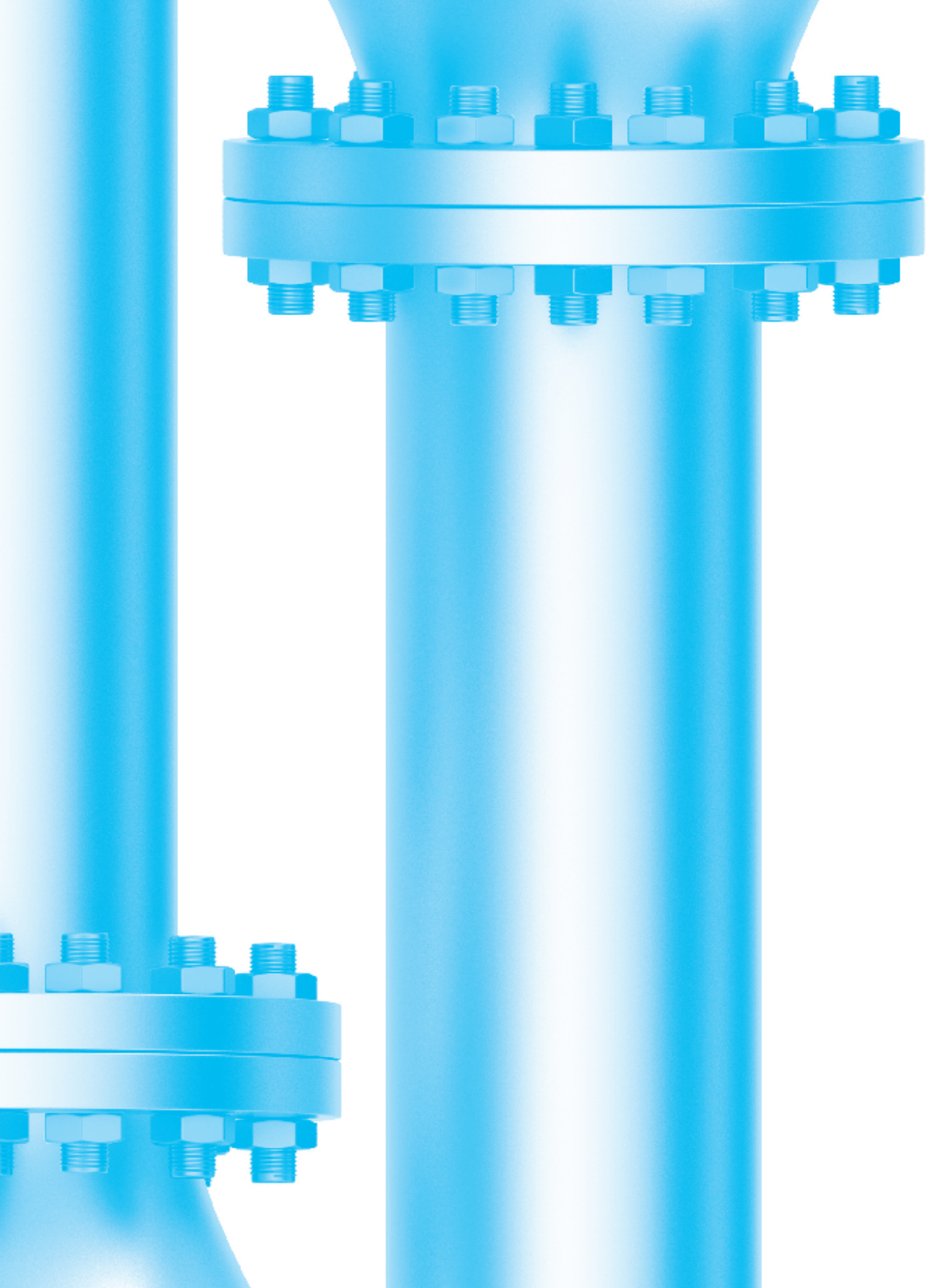

CONTENTS

FOREWORD BY THE CEO OF NET4GAS

Ladies and Gentlemen,

In 2018, the NET4GAS Group saw a year-on-year increase in the total gas volumes transported. International transit through the Czech Republic reached its highest level in the last 14 years. We focused our main efforts on the extension of the transmission system in response to market demand for new cross-border capacities. In the field of innovation, we launched the preparatory phase of a pilot project that is to bring the current debate on the transition to a low-carbon economy into practice.

In terms of financial results, our consolidated operating profit for the 2018 fiscal year reached a solid CZK 4.5 billion. S&P Global Ratings and Fitch Ratings reaffirmed the long-term BBB investment grade rating of NET4GAS with a stable outlook, which shows our consistent performance and preparedness to implement our ambitious capex program, with the full support of our shareholders.

Total gas volumes transported in 2018 recorded a year-on-year increase of 5.6 bcm, reaching 48.1 bcm. Total entry flows from Germany amounted to 39.1 bcm, showing the continuing increase in gas transmission in the west-east direction. Of the total gas volumes, 8.2 bcm went to the Czech Republic. Domestic transport decreased year-on-year by 0.3 bcm, mainly due to warmer weather compared to the preceding year.

Gas transmission services for our customers continued uninterruptedly. The number of contracts reached a total of 5,570, which is an increase of more than 1,300 year-on-year. Again, the figures are evidence of the growing interest of gas traders in short-term products.

We are connecting markets. For the first time, market participants were offered the opportunity to have their gas shipped from the Czech Republic to Austria and vice versa with a single contract. Together with the Austrian TSO Gas Connect Austria we launched a one-year pilot project for a new service called Trading Region Upgrade (TRU), which connects our gas markets virtually, thus simplifying transaction procedures and reducing transaction costs.

Europe is facing a widening gap between supply and demand for natural gas. In response to significant market demand, the Capacity4Gas Project entered the construction phase in 2018. By implementing this project, we are increasing the gas transmission capacity in the Czech Republic, and thus aim to contribute to enhancing the security of supply in Central and Eastern Europe, and at the same time further reinforce the Czech Republic's strategic role in international gas transit.

In the meantime, a lively debate on the transition to a low-carbon economy is taking place in Europe. We want to take an active part in these efforts, and together with innogy Česká republika, we have therefore decided to analyse options for greening of natural gas and demonstrate that gas is a viable alternative for storing renewable energy. The joint project combines the Power2Gas technology and biogas purification.

We are convinced that natural gas, together with the increasing share of "green gases", will play an indispensable role in the European energy mix. We will go on promoting this conviction.

On behalf of the management, let me express my thanks to all employees, who contributed to the Group's solid results in 2018 and again achieved a zero LTIF rate, to our shareholders for their ongoing support, our customers for choosing our services, and not least to our suppliers and all other stakeholders for their cooperation in the implementation of our projects.

Andreas Rau
Chief Executive Officer
NET4GAS, s.r.o.

CONSOLIDATED GROUP DATA

CONSOLIDATED GROUP DATA

The consolidated group (hereinafter referred to as "Group" or "NET4GAS Group"), for which this Consolidated Annual Report is prepared, consists of the consolidating company NET4GAS, s.r.o. (hereinafter referred to as "NET4GAS" or "consolidating company") and consolidated company BRAWA, a.s. (hereinafter referred to as "BRAWA" or "consolidated company").

CONSOLIDATING COMPANY

Company name:	NET4GAS, s.r.o.
Identification number:	272 60 364
LEI:	529900ND5BL2CXRIPT15
Date of registration in the Commercial Register:	29 June 2005
Address:	Na Hřebenech II 1718/8, 140 21 Prague 4 – Nusle, Czech Republic
Stake in BRAWA, a.s.:	100%

CONSOLIDATED COMPANY

Company name:	BRAWA, a.s.
Identification number:	247 57 926
Date of registration in the Commercial Register:	10 November 2010
Address:	Na Hřebenech II 1718/8, 140 21 Prague 4 – Nusle, Czech Republic

TRANSMISSION SYSTEM

NET4GAS COMPANY PROFILE

NET4GAS holds an exclusive gas Transmission System Operator (TSO) licence in the Czech Republic and secures the international transit across the Czech Republic, domestic transmission to partners in the Czech Republic and associated commercial and technical services. It operates more than 3,800 km of pipelines, three border transfer stations, four compressor stations, and nearly a hundred transfer stations at the interface with domestic gas distribution. NET4GAS is a member of the Czech Gas Association, the international organisations ENTSOG, GIE, EASEE-gas, and the IGU and Marcogaz working groups. The company has more than 500 employees and is committed to corporate social responsibility. It is one of the largest private corporate donors to nature conservation in the Czech Republic.

OWNERSHIP OF NET4GAS AS OF 31 DECEMBER 2018

For the entire year 2018, NET4GAS was wholly owned by NET4GAS Holdings, s.r.o., which in turn is owned by a consortium formed by Allianz Infrastructure Czech HoldCo II S.à r.l. (50%) and Borealis Novus Parent B.V. (50%).

NET4GAS STRATEGY

NET4GAS mission

Our mission is to secure economically efficient, safe and reliable gas transmission services for our customers 24 hours a day, 7 days a week, and to provide sufficient capacities in all relevant supply situations based on a non-discriminatory and transparent approach.

NET4GAS vision

As a Central European gas Transmission System Operator, NET4GAS will play an active role in connecting and integrating European energy markets to the benefit of Czech and other European customers.

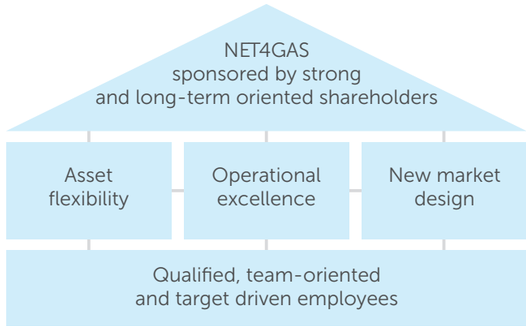

Highly qualified employees are our company's foundation stone and most valued resource. Their team-oriented work and target-driven approach are major factors in the company's continuous development, which is clearly focused on the three strategic pillars of asset flexibility, operational excellence and new market design.

Along with the range of attractive capacity products we offer our customers, enhancing our asset flexibility by building and optimising new and existing cross-border interconnectors allows us to swiftly respond to changing gas flow patterns in Europe.

We strive for operational excellence to meet our customers' expectations and to manage the financial and operational demands resulting from increasing fluctuations in grid utilization, regulation and growing competition on energy markets.

We will continue to help shaping the European energy market in the context of the transition to a low carbon economy, and by doing so will contribute to the preservation and enhancement of functioning gas markets, especially in Central and Eastern Europe where we operate.

In achieving our vision and attaining our strategic goals, we receive major sponsorship from our strong and long-term oriented shareholders, who thus safeguard the fulfilment of our company strategy.

We are also fully aware of our corporate social responsibility, and we strictly follow an environmental policy committed to both present and future generations.

NET4GAS SUPERVISORY BOARD AS OF 31 DECEMBER 2018

Kenton Edward Bradbury
Chairman of the Supervisory Board
Position held since: 24 June 2016
Member since: 1 July 2015

Andrew Cox
Member of the Supervisory Board
Member since: 11 May 2017

Jaroslava Korpancová
Member of the Supervisory Board
Member since: 2 August 2018
(in the Supervisory Board continuously since 2 August 2013)

Mikhail Nahorny
Member of the Supervisory Board
Member since: 1 July 2016

Georg Nowack
Member of the Supervisory Board
Member since: 6 December 2018

Changes in the NET4GAS Supervisory Board

Under a decision of the sole shareholder of NET4GAS exercising the powers of the General Meeting, Jaroslava Korpancová was re-elected as a Member of the Supervisory Board effective as of 2 August 2018. On 22 June 2018, Kenton Edward Bradbury was re-elected as Chairman of the Supervisory Board.

In the course of 2018, changes took place in the composition of the NET4GAS Supervisory Board. Under a letter dated 4 September 2018, Lenka Kovačovská resigned as a Member of the Supervisory Board. Her term of office expired on 14 September 2018. Under a decision of the sole shareholder of NET4GAS exercising the powers of the General Meeting, Georg Nowack was elected as a new Member of the Supervisory Board effective as of 6 December 2018.

NET4GAS STATUTORY DIRECTORS AS OF 31 DECEMBER 2018

Andreas Rau
Statutory Director and CEO
Position held since: 1 December 2018
(NET4GAS Statutory Director continuously since 1 December 2013)

Radek Benčík
Statutory Director and COO
Position held since: 1 October 2016
(NET4GAS Statutory Director continuously since 1 October 2011)

Václav Hrach
Statutory Director and CFO
Position held since: 1 March 2014

Changes in the NET4GAS Statutory Directors

No changes occurred in the composition of the NET4GAS Statutory Directors in 2018. On 5 October 2018, the NET4GAS Supervisory Board re-elected Andreas Rau and Václav Hrach Statutory Directors of the company for a further five-year term.

NET4GAS AUDIT COMMITTEE AS OF 31 DECEMBER 2018

Following the issue of investment securities accepted for trading on the regulated European market, NET4GAS has become a public interest entity within the meaning of Act No. 563/1991 Coll. on Accounting, as amended, and is subject to the duty to establish an Audit Committee. The main responsibilities of the Audit Committee include monitoring the internal control system and the risk management system, overseeing the effectiveness of internal audit and securing its functional independence, monitoring the compilation of financial statements and consolidated financial statements, recommending the statutory auditor, assessing the independence of the statutory auditor and the audit company, evaluating the provision of supplementary services, and overseeing the conduct of mandatory audit.

The NET4GAS Audit Committee was established under a decision of the NET4GAS Statutory Directors on 31 May 2016.

Michal Petrman
Chairman of the Audit Committee
Position held since: 15 September 2016
Member since: 1 June 2016

Igor Lukin
Member of the Audit Committee
Member since: 1 June 2016

Mikhail Nahorny
Member of the Audit Committee
Member since: 1 June 2016

Stanislav Staněk
Member of the Audit Committee
Member since: 1 June 2016

Pavel Závitkovský
Member of the Audit Committee
Member since: 1 June 2016

Changes in the NET4GAS Audit Committee

No changes occurred in the composition of the NET4GAS Audit Committee in 2018. In line with the statutes of the Audit Committee, Michal Petrman, Stanislav Staněk and Pavel Závitkovský were re-appointed as independent members of the Audit Committee effective as of 1 June 2018. On 21 June 2018, Michal Petrman was re-elected as Chairman of the Audit Committee.

Fees for services provided to the NET4GAS Group

- Deloitte Audit s.r.o.: CZK 1,450 thousand
- Deloitte Advisory s.r.o.: CZK 816 thousand

BRAWA COMPANY PROFILE

BRAWA is the owner of the GAZELLE gas pipeline. This 166-kilometre pipeline, with a pipe diameter of DN 1400 and a design pressure of 85 bar, connects the transmission systems of the Czech Republic and the Federal Republic of Germany at the border points Brandov and Rozvadov. NET4GAS is the operator of the GAZELLE pipeline.

SHAREHOLDER OF BRAWA AS OF 31 DECEMBER 2018

In 2018, BRAWA's sole shareholder was NET4GAS.

BRAWA SUPERVISORY BOARD AS OF 31 DECEMBER 2018

Martin Kolář
Chairman of the Supervisory Board
Position held since: 2 November 2018
Membership since: 1 July 2018
(in the Supervisory Board continuously since 20 March 2012)

Radek Benčík
Vice-Chairman of the Supervisory Board
Position held since: 2 November 2018
Membership since: 1 July 2018
(in the Supervisory Board continuously since 20 March 2012)

Andreas Rau
Member of the Supervisory Board
Membership since: 19 February 2018
(in the Supervisory Board continuously since 19 February 2014)

Changes in the Supervisory Board

No changes occurred in the composition of the Supervisory Board of BRAWA in 2018. Under decisions of the sole shareholder of BRAWA, Members of the Supervisory Board were re-elected, namely Andreas Rau as of 19 February 2018, and Martin Kolář and Radek Benčík as of 1 July 2018. On 2 November 2018, Martin Kolář was re-elected as Chairman and Radek Benčík as Vice-Chairman of the Supervisory Board.

BRAWA BOARD OF DIRECTORS AS OF 31 DECEMBER 2018

Jan Martinec
Chairman of the Board of Directors
Position held since: 11 November 2015
Member since: 7 July 2014

Miroslav Holý
Vice Chairman of the Board of Directors
Position held since: 11 November 2015
Member since: 1 November 2015

Changes in the Board of Directors

No changes occurred in the composition of the Board of Directors of BRAWA in 2018.

CONSOLIDATED REPORT ON OPERATIONS

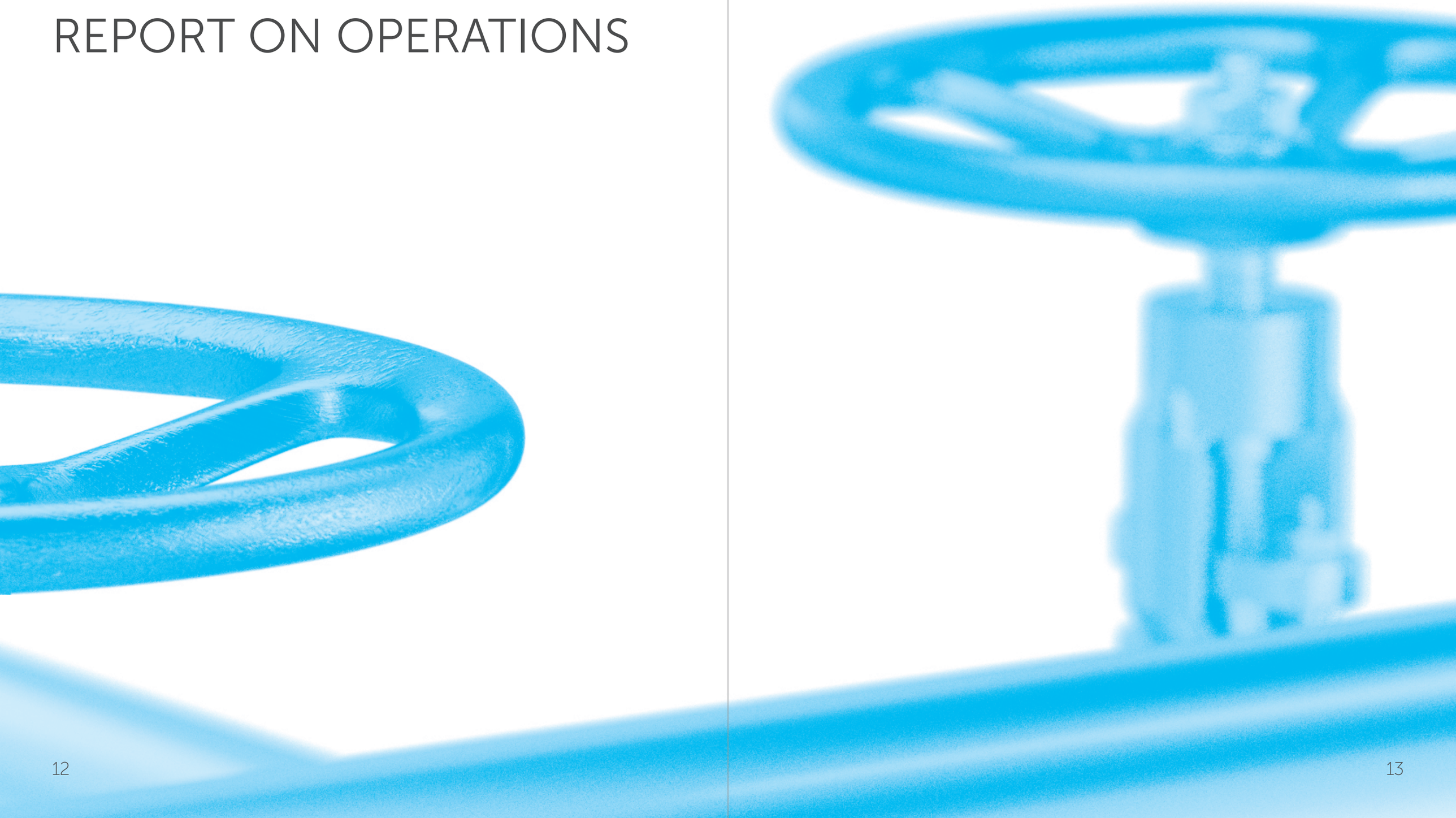

CONSOLIDATED REPORT ON OPERATIONS

NET4GAS GROUP MAIN FINANCIAL INDICATORS

Selected indicators*	2018 (CZK million)
Revenue	7,335
Operating profit	4,534
Profit before taxation	3,630
Profit after taxation	2,933
Investments – capital expenditure to tangible and intangible assets	1,439

* according to IFRS as adopted by the European Union

Revenues, costs, profit

The Group's main business activity is natural gas transmission in accordance with the Act No. 458/2000 Coll., on conditions for undertaking the business and for the execution of state administration in the energy sector and on changes to certain acts (the "Energy Act").

In 2018, the Group achieved profit before taxation of CZK 3,630 million and profit after taxation of CZK 2,933 million. Operating profit of the Group amounted to CZK 4,534 million in 2018.

The Group generated a profit from its core business operations – transit of natural gas and domestic transmission. Its total operating income amounted to CZK 7,448 million and total operating costs were CZK 2,914 million.

Asset structure

The total assets of the Group in 2018 amounted to CZK 47,971 million, of which non-current assets accounted for CZK 42,992 million, representing 90%. The main components of these assets were tangible fixed assets valued at CZK 42,704 million, intangible fixed assets valued at CZK 68 million and prepayments for acquisition of fixed assets.

As of 31 December 2018, current assets amounted to CZK 4,979 million, representing 10% of total assets. Roughly 26% of current assets was represented by cash and 56% by short-term financial assets.

Investments

In 2018, the Group acquired tangible assets in the total amount of CZK 1,439 million (additions of fixed assets at cost), out of which CZK 28 million intangible fixed assets and CZK 1,411 million tangible fixed assets. The most significant investment of CZK 997 million was within the Capacity4Gas project.

Structure of liabilities

The Group's equity in the year ended on 31 December 2018 amounted to CZK 11,433 million and accounted for approximately 24% of the Group's total liabilities.

Current and non-current liabilities amounted to CZK 36,538 million.

Non-current borrowings and other non-current liabilities (particularly bonds, bank borrowing, deferred taxes liabilities, and derivatives liabilities) accounted for approximately 96% of total liabilities; current liabilities accounted for approximately 4% of total liabilities.

Investment instruments

To secure a return on its available cash during 2018, the Group made use of term deposits and bills of exchange offered by leading banking institutions. No significant price, credit or liquidity risks were identified in connection with the instruments concluded, other than described in the consolidated financial statements, which are an integral part of this Consolidated Annual Report.

Research and development activities

The Group did not make any major expenditure into research and development in 2018.

Branches or other parts of business premises abroad

Neither of the companies of the Group has branches in the Czech Republic or abroad.

NET4GAS MAIN FINANCIAL OPERATIONS

In 2018, NET4GAS took advantage of the favourable financial market conditions and, drawing on low interest rates, refinanced part of its bonds worth CZK 2.646 billion due in 2021. The new CZK bond issue matures in 2025 and bears an annual fixed coupon rate. The transaction did not change the amount of the company's debt.

S&P Global Ratings and Fitch Ratings reaffirmed NET4GAS's long-term rating at the BBB investment grade with a stable outlook. The rating continues to reflect the fact that NET4GAS possesses the financial strength to fully meet its present and future obligations in a timely manner and is prepared to carry out its planned long-term investments.

NET4GAS MAIN BUSINESS OPERATIONS

The total volume of natural gas transmitted in 2018 amounted to 48.1 billion cubic meters (bcm), of which 8.2 bcm was for the Czech Republic. Compared to 2017, the total volume of transmitted gas increased by 5.6 bcm, mainly thanks to a higher volume of gas transmitted from Germany, where total entry flows amounted to 39.1 bcm. In 2018, gas transit reached its highest level in the last 14 years. Domestic transmission decreased by 0.3 bcm year-on-year, mainly on account of warmer weather compared to the preceding year.

Within its commercial activities, NET4GAS fulfilled its contractual commitments under 5,570 gas transmission agreements in 2018. Their year-on-year increase by more than 1,300 confirms the growing interest of gas traders in short-term products.

In cooperation with Gas Connect Austria GmbH, the Austrian gas transmission system operator, NET4GAS launched a one-year pilot project for a new service called Trading Region Upgrade (TRU), that connects the Austrian and Czech gas market virtually with the aim of simplifying transaction procedures and reducing transaction costs.

Moreover, in compliance with a requirement laid down in Commission Regulation (EU) 2017/459 of March 16, 2017, NET4GAS and the adjacent transmission system operators in Germany established a virtual interconnection point between the Czech Republic and the German GASPOOL market area, thus simplifying the booking of gas transmission capacity between the two market areas.

NET4GAS continued the execution of projects aimed at the development of the gas transmission system. Focus concentrated on the Capacity4Gas Project, which entered the implementation stage in 2017 following the confirmation of demand for new long-term cross-border capacity at the annual auction on the PRISMA platform. The objective of this project is to build new gas infrastructure and to interconnect it with the EUGAL pipeline in Germany. The project aims to contribute to enhancing the security of supply in the Czech Republic, as well as throughout Central and Eastern Europe, and at the same time further reinforce the Czech Republic's strategic role in international gas transit. The main reason behind the project is to respond to the increasing gap between supply and demand for natural gas in Europe. The project is being executed in two stages, which are planned to be completed in 2019 and 2021.

In 2018, the fourth, updated List of Projects of Common Interest (PCI) entered into effect. Introduced under Regulation of the European Parliament and of the Council (EU) No. 347/2013, the PCI List is intended to facilitate and accelerate the implementation of strategically important projects in the energy sector. As in preceding years, the European

Commission included on the PCI list the Czech-Polish Gas Interconnector* ** and the Bidirectional Austrian-Czech Interconnection (BACI)* **. The two projects form a part of the so-called north-south gas corridor in Central Europe. NET4GAS continued preparatory works on these projects, while a final decision on the investment has not been taken.

In response to an application for connection to the transmission system, a connection agreement with one new customer was entered into in 2018. The relevant project, which advanced to the preparatory stage, aims to build a direct connection between the transmission system and a gas liquefaction facility. In addition, NET4GAS received one application for the connection of a power plant / heating plant.

To ensure the safe and reliable transmission of natural gas, NET4GAS went on maintaining and upgrading the transmission system, including compressor stations. In line with the long-term transmission system maintenance plan, NET4GAS completed the first stage of a DN 700 pipeline upgrade between Hospozín and Drahelčice, and continued a DN 500 pipeline reconstruction between Olešná and Černá za Bory.

NET4GAS is also active in the area of innovation. Against the backdrop of the current debate on the transition to a low-carbon economy in Europe, NET4GAS together with innogy Česká republika a.s. decided to analyse options for greening of natural gas and demonstrate that gas is a viable alternative for storing renewable energy. The joint project combines the Power2Gas technology and biogas purification in order to produce renewable gases to be injected into the transmission and distribution systems. In 2018, the project entered its preparatory stage, where the main tasks include selecting a suitable locality and defining general technical specifications.

* Co-financed by the European Union
Trans-European Energy Networks Program (TEN-E)

** Co-financed by the European Union
Connecting Europe Facility

BRAWA BUSINESS OPERATIONS

The core activity of BRAWA in 2018 was managing its property, the GAZELLE pipeline, and its lease to the transmission system operator NET4GAS.

HUMAN RESOURCES

As of 31 December 2018, NET4GAS had 526 employees, 19% of whom were women. Women accounted for 15% of employees in management positions. The education structure of the company's workforce remained stable. The standard of NET4GAS employees' working and social conditions is defined under a Collective Agreement valid 2015–2020. As of 31 December 2018, BRAWA had no employees.

As part of its human resources and social policy, NET4GAS offers its employees programs and benefits that include, inter alia, retirement savings and life insurance contributions, restaurant vouchers, five days of vacation above the legal requirement, sick days, flexible working time, premium healthcare, contributions for leisure activities, or assistance for families with young children. NET4GAS facilitates the return of employees to work, particularly through maintaining contact on parental leave, supporting their active participation in projects and employee events, and allowing them to work from home. As in previous years, employees had an opportunity to obtain financial support for a pre-school which their children attend.

Cooperation continued with schools, students, and graduates with the aim of supporting fields of study related to the company's business and fostering technical expertise (see NET4GAS Corporate Philanthropy). NET4GAS also continued to support the employment of handicapped persons. Every position was assessed in view of suitability for handicapped individuals and advertised as such where applicable.

HEALTH AND SAFETY AT WORK

The NET4GAS Group pays close attention to health and safety at work, where the primary objective is to ensure that, upon departure from the workplace, every employee is as healthy as upon arrival. Efforts at maintaining a safe working environment target all parts of the workplace, and apply not only to employees, but also to suppliers.

Within the framework of executing its improvement program, the Group implemented a number of new measures in 2018 that provide safety above the level required under the law, particularly with regard to construction work on gas infrastructure. No employee was involved in an accident resulting in incapacity for work in 2018, and the Group therefore met its principal goal for occupational health and safety for the third year in a row.

ENVIRONMENTAL PROTECTION

Close attention is also paid to environmental protection, which the NET4GAS Group regards not only from the viewpoint of fulfilling legal requirements, but primarily as its social responsibility. Environmental protection is taken into consideration in all decisions and processes with the aim of minimizing any burden the company's operations might place.

In 2018, the NET4GAS Group complied with all legal requirements pertaining to environmental protection. In accordance with requirements of the central and local governments, designated facilities have contingency plans to respond to accidents as per the Water Act. In 2018, the stated plans fulfilled only the role of preventative measures, as no environmental accident occurred at any Group facilities. The final reports of local and central government authorities that performed inspections concluded that the Group is in compliance with all duties arising under laws and integrated permits in effect.

The Group's commitment to environmental protection goes beyond the scope of legal requirements. For instance, thanks to deploying a mobile compressor to remove natural gas from a pipeline section undergoing repairs, the company saved 8,619,971 cubic meters of gas that would have otherwise been released into the atmosphere. Recycling, energy savings, and other environment-friendly activities were, and remain an integral part of the Group's operations. In 2018, the Group continued to support nature conservation and environmental protection projects under the NET4GAS Closer to Nature program (see NET4GAS Corporate Philanthropy).

INTERNAL CONTROL PRINCIPLES

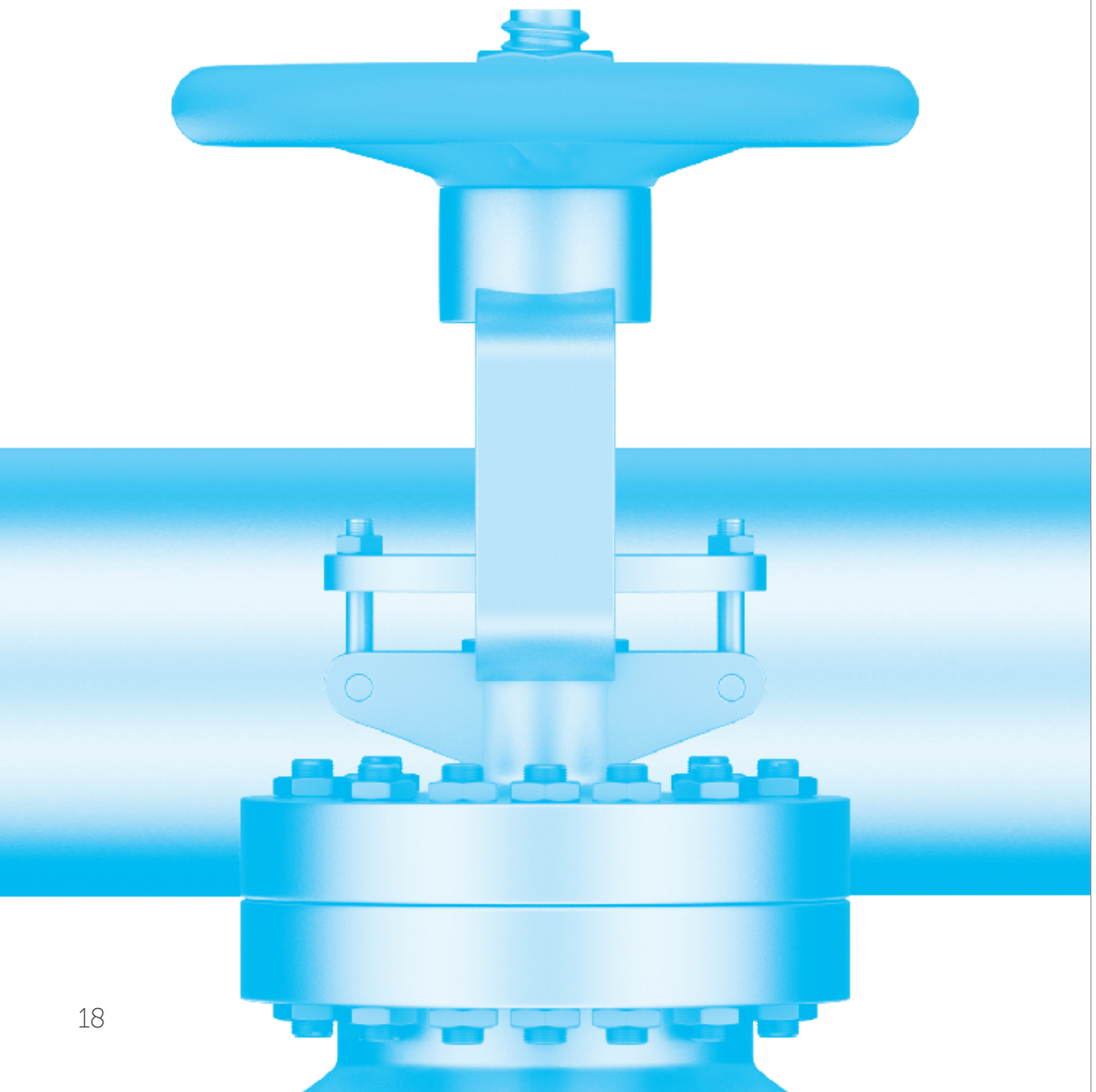

INTERNAL AUDIT

The essence of the Internal Audit is objective assurance focused on adding value to improving processes and reducing risks. It is an integral component of the management and control system and an important tool for the continuous improvement of the NET4GAS Group. The Internal Audit is supervised by the Audit Committee.

AUDIT COMMITTEE

The Audit Committee is described in the section Consolidated Group Data.

RISK MANAGEMENT COMMITTEE

The NET4GAS Group manages its risk with due care and diligence. Risks are continuously identified, assessed from the point of view of their likely occurrence and the extent of potential damage and are reported to the internal Risk Management Committee. Existing risks are continuously monitored and updated.

The Risk Management Committee's responsibilities include, in particular, discussing identified risks to the Group and approving strategies for managing them. It is also the Committee's task to regularly assess the overall risk to the Group.

CODE OF CONDUCT

The NET4GAS Group is conscious of its role in society and its responsibility towards all its stakeholders and the environment, in which it operates. It has therefore committed itself to a clear set of principles which form a framework for its activities in the business and social spheres defined by the Code of Conduct. Its adherence is monitored by the Compliance Officer.

The conduct of the Group and the employees is based on personal responsibility, honesty, loyalty, and respect for others, their safety and the environment. The Group supports the internationally declared human rights, promotes their protection and at the same time ensures that no violation of human rights occurs in the Group. It also acts against all forms of corruption, including extortion and bribery.

The Code of Conduct forms the basis for the creation of further internal documentation and every employee is acquainted with it. Moreover, annual reporting on the implementation of the Code of Conduct is introduced. In 2018, the Compliance Officer did not receive any notification of a violation of the Code of Conduct.

OMBUDSMAN AND FRAUD PREVENTION

The Ombudsman is an independent position which chiefly involves collecting complaints and information relating to potentially fraudulent activities or to activities which are in conflict with the company's internal regulations or the law. The Ombudsman evaluates these submissions before convening an investigation committee, whose role is to make an independent assessment and evaluation and then propose corrective measures. The Ombudsman may also be contacted by parties outside the company. The position of Ombudsman is performed for the NET4GAS Group by an external law firm. In 2018, the Ombudsman did not receive any submission.

NET4GAS CORPORATE PHILANTHROPY

NET4GAS CORPORATE PHILANTHROPY

NET4GAS is aware of its corporate social responsibility and therefore, in 2018 it continued devoting itself to corporate philanthropy and sponsorship, aimed at improving the living conditions in the Czech Republic in the following areas:

- NET4GAS Closer to Nature:
  nature and the environment protection
- NET4GAS Closer to Knowledge:
  education, training and research
- NET4GAS Closer to Regions:
  local development

NET4GAS CLOSER TO NATURE

Come to nature with us at www.closertonature.cz!

NET4GAS pursues a responsible policy aimed at protecting nature and the environment with respect to current and future generations. This principle not only underlies the company's responsible entrepreneurship but is also the basis for its long-term strategy of corporate philanthropy and sponsorship, which has been implemented under the programme NET4GAS Closer to Nature since 2007. NET4GAS has been systematically providing long-term support to projects where a major aspect of sustainable development is expressed by precisely that motto – "Closer to Nature" – and is one of the largest corporate donors in the field of nature conservation in the Czech Republic.

NET4GAS has been the general partner of the Czech Union for Nature Conservation since 2007 and the goal of their cooperation is to present attractive and valuable natural sites to the public stressing the awareness about the reasons for their protection, in both an educational and entertaining way. In 2018, NET4GAS and the Union opened further six sites of natural value to the public, bringing the total over their partnership to 93. Moreover, the support focused on the renovation of existing sites, direct nature conservation projects and the nationwide science and nature competitions Zlatý list ("Golden Leaf") and Ekologická olympiáda ("Ecological Olympiad").

NET4GAS CLOSER TO KNOWLEDGE

This second pillar of philanthropy and sponsorship has its foundation in the focus on operational excellence delivered by a trained and qualified team. Sustainable development would be impossible without quality training, education, research and development. The company therefore supports these areas under its programme NET4GAS Closer to Knowledge. In 2018, NET4GAS, inter alia, continued to develop its general partnership with the Department of Gaseous and Solid Fuels and Air Protection of the Faculty of Environmental Technology at the University of Chemistry and Technology Prague, and its partnership of the Czech Technical University in Prague. In particular, their cooperation included merit scholarships and awards for students, lectures and other educational and promotional events.

NET4GAS CLOSER TO REGIONS

Operation, long-term development and maintenance of the gas transmission system, which runs through almost every region of the Czech Republic, is a cornerstone of the company's business. As a good neighbour, it targets its third programme – NET4GAS Closer to Regions – on local development in the locations where it operates. In 2018, NET4GAS was, for example, the main partner of the Voluntary Firemen of the Year contest for the sixth year in a row, the main mission of which is to support and promote the activities of firemen, who are also a natural partner of NET4GAS in ensuring the safety and reliability of natural gas transmission.

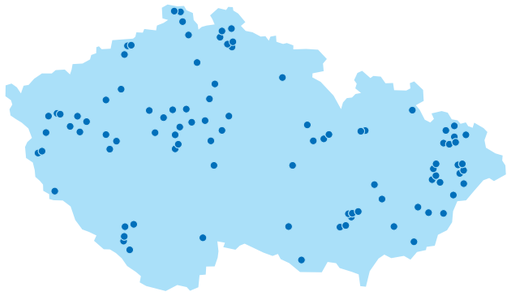

● NET4GAS Closer to Nature locations

NET4GAS REPORT ON RELATIONS

The Statutory Directors of NET4GAS, s.r.o. (hereinafter in this Report on Relations referred to as "Company") have drawn up, in accordance with the provision of the Section 82 of Act No. 90/2012 Coll., the Business Corporations Act (hereinafter referred to as "BCA"), the following Report on Relations covering the relations among the Company and controlling entities and among the Company and other entities controlled by the same controlling entities (hereinafter referred to as "Related Parties") during 2018 in all cases where the Company is aware of the existence of such Related Parties. This Report on Relations forms an integral part of the NET4GAS Group Consolidated Annual Report 2018 and is provided to the Company's shareholder for review within the same period of time and under the same conditions as the Financial Statements.

1. Controlling entities

In the accounting period ended 31 December 2018, the Company was controlled:

a) directly by
NET4GAS Holdings, s.r.o., with its registered office at Na hřebenech II 1718/8, Nusle, Prague 4, 140 00, Czech Republic, ID No. 291 35 001, registered in the Commercial Register maintained by the Municipal Court in Prague, Section C, File No. 202655;

b) indirectly by
(i) Allianz Infrastructure Czech HoldCo II S.à r.l., with its registered office at L-2450 Luxembourg, boulevard F.D. Roosevelt 14, Grand Duchy of Luxembourg, registration number: B 175770, and (ii) Borealis Novus Parent B.V., with its registered office at 1011PZ Amsterdam, Muiderstraat 9, Kingdom of the Netherlands, registration number: 57412243, each of which is a shareholder of NET4GAS Holdings, s.r.o. with an ownership interest of 50%, and which together have the status of joint controlling entities in relation to NET4GAS Holdings, s.r.o. by virtue of Section 75(3) of the BCA.

2. Other Related Parties

The Company requested that the above controlling entities provide a list of any other entities controlled by the same controlling entities during the most recent accounting period, and the Statutory Directors of the Company have drawn up the present Report on Relations based on the information provided by these controlling entities and the other information at their disposal.

The structure of the relations among the controlling entities and the controlled entity and other Related Parties is set out in Annex No. 1 to this Report on Relations.

3. Role of the controlled entity, method and means of control

In 2018, the Company carried out its activities in accordance with Act No. 458/2000 Coll., on conditions for undertaking the business and for the execution of state administration in the energy sector and on changes to certain decrees (hereinafter referred to as "Energy Act"), and as such operated independently of controlling entities and other Related Parties.

NET4GAS Holdings, s.r.o., as the controlling entity and as the sole shareholder of the Company in the powers of the General Meeting exercised its rights and performed its obligations in respect of the Company in compliance with legislation, in particular as laid down in the BCA and the Energy Act.

4. Agreements concluded between the Company and Related Parties

The agreements concluded between the Company and controlling entities or Related Parties during the most recent accounting period are listed in Annex No. 2 to this Report on Relations. The agreements concluded in preceding accounting periods which were in effect during the most recent accounting period form Annex No. 3 to this Report on Relations.

5. Acts performed in the most recent accounting period at the instigation or in the interest of controlling entities or Related Parties

In the most recent accounting period, the Company, in addition to concluding agreements as specified in Article 4 of this Report on Relations, also performed acts at the instigation or in the interest of controlling entities or Related Parties as specified in Annex No. 4 to this Report on Relations.

6. No damage

In the most recent accounting period, the Company incurred no damage as a result of agreements with controlling entities or Related Parties, or as a consequence of other acts or actions performed in the interest or at the instigation of the same, which were concluded or undertaken during the most recent accounting period or in any preceding accounting period. It has therefore not been necessary to secure compensation for damage or to conclude any agreements on such compensation.

7. Advantages and disadvantages resulting from relations with Related Parties

In the most recent accounting period, the relations among the controlling entities and Related Parties were an advantage for the Company in terms of the increased financial stability.

8. Confidentiality

None of the information contained in this Report on Relations constitutes a trade secret of the Company.

9. Conclusion

This Report on Relations was approved by the Company's Statutory Directors on 8 March 2019 and was submitted for review to the Company's Supervisory Board.

In Prague on 11 March 2019

Andreas Rau
Statutory Director

Radek Benčík
Statutory Director

Václav Hrach
Statutory Director

Annex No. 1
Structure of relations among controlling entities and Related Parties in the most recent accounting period

Allianz Infrastructure Czech HoldCo II S.à r.l. (50.00%) and Borealis Novus Parent B.V. (50.00%)

100.00 % NET4GAS Holdings, s.r.o.

100.00 % NET4GAS, s.r.o.

BRAWA, a.s.

Annex No. 2
Agreements concluded between the Company and controlling entities or Related Parties in the most recent accounting period

Contracting party	Agreement	Date of conclusion	Details
BRAWA, a.s.	Agreement on the establishment of an easement (no. 1)	3 August 2018	The subject matter of the agreement is the establishment of an easement – the underground line of a high-pressure gas pipeline above 40 bar "High-pressure DN 1400 gas pipeline, RU Kateřinský potok – RU Přimda"
BRAWA, a.s.	Agreement on the establishment of an easement (no. 2)	3 August 2018	The subject matter of the agreement is the establishment of an easement – the underground line of a high-pressure gas pipeline above 40 bar "High-pressure DN 1400 gas pipeline, RU Kateřinský potok – RU Přimda"
BRAWA, a.s.	Agreement on the establishment of an easement (no. 3)	3 August 2018	The subject matter of the agreement is the establishment of an easement – the underground line of a high-pressure gas pipeline above 40 bar "High-pressure DN 1400 gas pipeline, RU Kateřinský potok – RU Přimda"
NET4GAS Holdings, s.r.o., BRAWA, a.s. (multilateral agreement)	Amendment 001 to the Agreement Ref. No. ZBA/2017/07 on the provision of real unidirectional cash pooling	27 September 2018	The subject matter of the amendment is a formal modification of terminology.
NET4GAS Holdings, s.r.o. (multilateral agreement)	Amendment 001 to the Agreement Ref. No. ZBA/2017/08 on the provision of real unidirectional cash pooling	27 September 2018	The subject matter of the amendment is a formal modification of terminology.
NET4GAS Holdings, s.r.o. (multilateral agreement)	Amendment 001 to the Agreement Ref. No. ZBA/2017/09 on the provision of real unidirectional cash pooling	27 September 2018	The subject matter of the amendment is a formal modification of terminology.

Orders of BRAWA, a.s. at NET4GAS, s.r.o.

- Reposting insurance premiums (two orders)
- Reposting insurance broker services (one order)
- Reposting legal advice (one order)
- Services related to the GDPR (one order)

Orders of NET4GAS, s.r.o. at NET4GAS Holdings, s.r.o.

- Reposting HR agency services (two orders)

Annex No. 3
Agreements concluded between the Company and controlling entities or Related Parties in previous accounting periods and effective in the last accounting period

Contracting party	Agreement	Date of conclusion	Details
BRAWA, a.s.	Agreement on the provision of selected services as amended by Amendment No. 1 on 20 December 2013, Amendment No. 2 on 27 January 2014, Amendment No. 3 on 6 February 2015, Amendment No. 4 on 30 November 2015 and Amendment No. 5 on 30 December 2016	31 December 2012	The subject matter of this agreement is the provision of the following services by NET4GAS, s.r.o. to BRAWA, a.s.: GAZELLE project supervision, construction and assembly work within the construction, accounting, controlling, tax issues, payroll administration, cash-flow, risk management, insurance, facility management, purchasing and logistics, corporate affairs and network documentation.
BRAWA, a.s.	Lease agreement as amended Amendment No. 1 on 15 February 2017	31 December 2012	Under the agreement, BRAWA, a.s. leases gas infrastructure to NET4GAS, s.r.o., consisting primarily of the interconnector "High-pressure DN 1400 gas pipeline – Brandov BTS – Rozvadov" of approximately 160 km in length.
BRAWA, a.s.	Agreement on the provision of loans as amended by Amendment No. 1 on 16 July 2015	2 July 2013	
NET4GAS Holdings, s.r.o.	Agreement on the provision of loans as amended by Amendment No. 1 on 16 January 2014, Amendment No. 2 on 21 March 2014 and Amendment No. 3 on 16 July 2015	11 November 2013	The agreements lay down a framework for cash pooling in the Czech currency (among NET4GAS, s.r.o., BRAWA, a.s. and NET4GAS Holdings, s.r.o.) and US dollars and euros (among NET4GAS, s.r.o. and NET4GAS Holdings, s.r.o.), the purpose of which is to optimise the use of funds among the Related Parties and to reduce transaction costs.
NET4GAS Holdings, s.r.o., BRAWA, a.s. (multilateral agreement)	Agreement Ref. No. ZBA/2017/07 on the provision of real unidirectional cash pooling	9 November 2017	
NET4GAS Holdings, s.r.o. (multilateral agreement)	Agreement Ref. No. ZBA/2017/08 on the provision of real unidirectional cash pooling	9 November 2017	
NET4GAS Holdings, s.r.o. (multilateral agreement)	Agreement Ref. No. ZBA/2017/09 on the provision of real unidirectional cash pooling	9 November 2017	

Contracting party	Agreement	Date of conclusion	Details
NET4GAS Holdings, s.r.o.	Agreement on the provision of selected services	25 June 2015	The subject matter of the agreement is the provision of the following services by NET4GAS, s.r.o. to NET4GAS Holdings, s.r.o.: accounting, controlling, tax issues, cash-flow, contract management and PR service.
NET4GAS Holdings, s.r.o. (multilateral agreement)	Funding agreement	9 June 2017	The subject matter of the agreement, concluded between NET4GAS, s.r.o. and the companies NET4GAS Holdings, s.r.o., Allianz Infrastructure Luxembourg I S.à r.l. and OMERS Administration Corporation, is a definition of the possibility of financing an investment project of NET4GAS, s.r.o. by NET4GAS Holdings, s.r.o.

Annex No. 4

Acts performed in the most recent accounting period at the instigation or in the interest of controlling entities or Related Parties

Controlling entity or Related Party	Acts performed	Date	Details
NET4GAS Holdings, s.r.o.	Resolution of the sole shareholder of NET4GAS, s.r.o.	27 March 2018	The subject matter of the resolution is the approval of the distribution of profit generated in 2017 and its transfer into the retained earnings.
NET4GAS Holdings, s.r.o.	Resolution of the sole shareholder of NET4GAS, s.r.o.	13 August 2018	The subject matter of the resolution is a contribution to other capital funds outside the registered capital.
NET4GAS Holdings, s.r.o.	Resolution of the sole shareholder of NET4GAS, s.r.o.	5 October 2018	The subject matter of the resolution is the approval of an advance payment of profit distribution for 2018.
NET4GAS Holdings, s.r.o.	Resolution of the sole shareholder of NET4GAS, s.r.o.	15 November 2018	The subject matter of the resolution is a contribution to other capital funds outside the registered capital.

POST BALANCE SHEET EVENTS

No events have occurred subsequent to year-end that would have a material impact on the consolidated annual report for the year ended 31 December 2018.

PERSONS RESPONSIBLE FOR THE CONSOLIDATED ANNUAL REPORT

We hereby declare on our honour that the information stated in this Consolidated Annual Report is true and that no material facts have been omitted or misstated.

In Prague on 11 March 2019

Andreas Rau
Statutory Director

Radek Benčík
Statutory Director

Václav Hrach
Statutory Director

ANNEX NO. 1: CONSOLIDATED FINANCIAL STATEMENTS

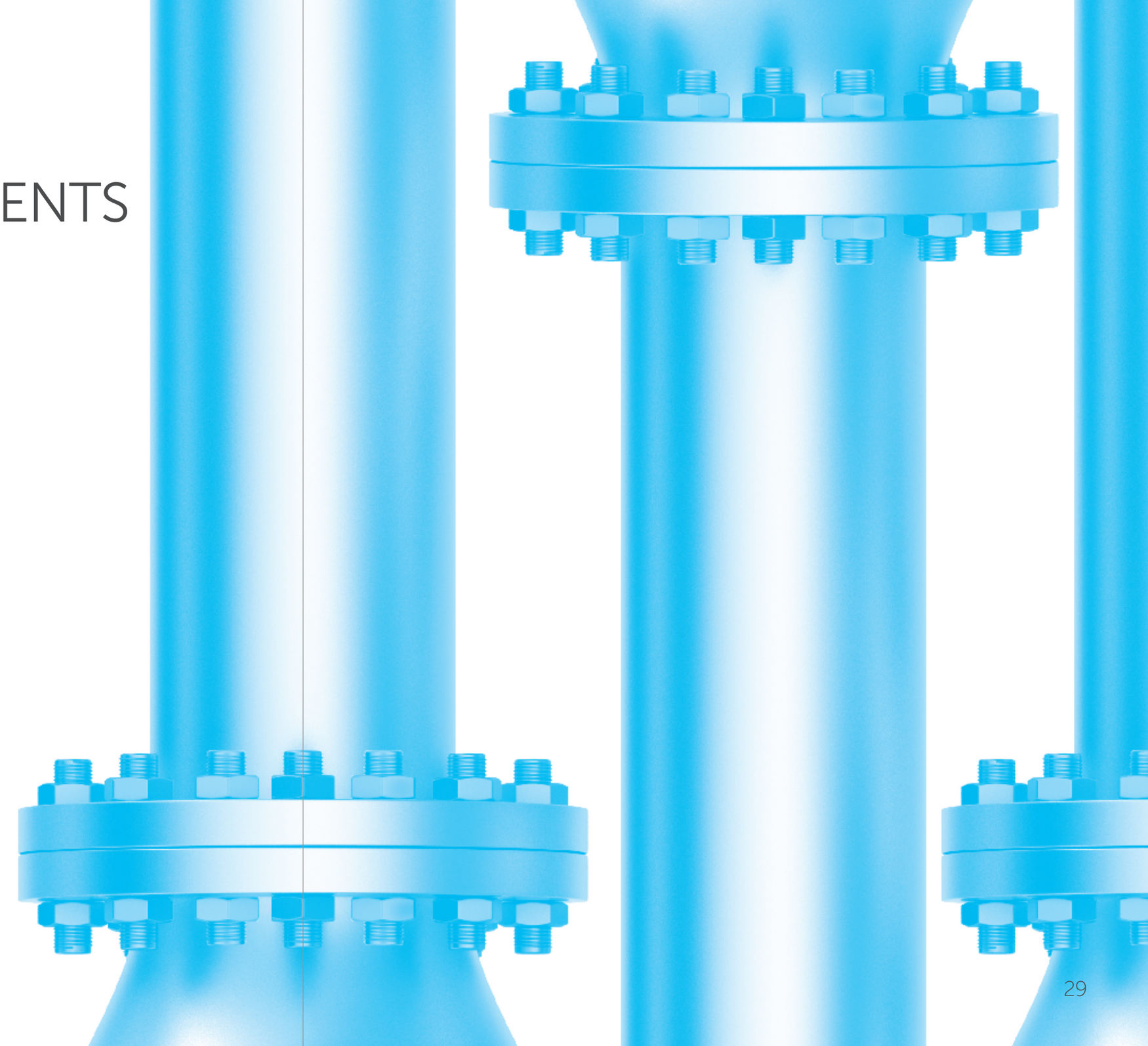

NET4GAS GROUP CONSOLIDATED FINANCIAL STATEMENTS

prepared in accordance with International Financial Reporting Standards
as adopted by the European Union, 31 December 2018

Contents

NET4GAS Group
Consolidated Balance Sheet as at 31 December 2018

In millions of Czech Crowns	Note	31 December 2018	31 December 2017
ASSETS			
NON-CURRENT ASSETS			
Property, plant and equipment	8	42,704	43,147
Intangible assets	9	68	78
Other non-current assets	10	220	25
Total non-current assets		**42,992**	**43,250**
CURRENT ASSETS			
Inventories	11	65	61
Trade and other receivables	13	701	324
Current income tax prepayments	26	68	248
Loans to related parties	12	8	5
Other non-financial assets	14	48	32
Other financial assets	15	2,787	683
Cash and cash equivalents	15	1,302	631
Total current assets		**4,979**	**1,984**
TOTAL ASSETS		**47,971**	**45,234**
EQUITY AND LIABILITIES			
EQUITY			
Registered capital	16	2,750	2,750
Capital contributions outside registered capital	16	4,549	3,364
Cash flow hedge reserve	16	51	465
Retained earnings		4,084	2,651
Total equity		**11,434**	**9,230**
NON-CURRENT LIABILITIES			
Other payables	21	10	13
Borrowings	17	27,106	26,988
Derivative financial instruments	28	1,258	835
Deferred income tax liability	26	6,572	6,789
Accrued employee benefits	22	105	101
Other non-financial liabilities	22	10	7
Total non-current liabilities		**35,061**	**34,733**

The accompanying notes on pages 38 to 88 are an integral part of these consolidated financial statements.

In millions of Czech Crowns	Note	31 December 2018	31 December 2017
CURRENT LIABILITIES			
Borrowings	17	291	299
Trade and other payables	21	703	517
Derivative financial instruments	28	231	209
Other taxes payable	19	18	18
Provisions	20	0	2
Accrued employee benefits	22	56	44
Other non-financial liabilities	24	177	182
Total current liabilities		**1,476**	**1,271**
Total liabilities		**36,537**	**36,004**
EQUITY AND LIABILITIES		**47,971**	**45,234**

11 March 2019



Andreas Rau
Statutory Director

Radek Benčík
Statutory Director

Václav Hrach
Statutory Director

The accompanying notes on pages 38 to 88 are an integral part of these consolidated financial statements.

NET4GAS Group
Consolidated Statement of Profit or Loss and Other Comprehensive Income for the year ended 31 December 2018

In millions of Czech Crowns	Note	2018	2017
Revenue	6	7,335	7,397
Raw materials consumed	23	(97)	(302)
Services purchased and lease charges	23	(432)	(307)
Employee benefits	23	(458)	(440)
Depreciation and amortisation	8, 9, 23	(1,891)	(2,013)
Gains less losses on disposal of property, plant and equipment		(1)	–
Changes in fair value of derivatives, net		40	(37)
Foreign exchange differences, net	23	30	(100)
Other operating income		44	39
Other operating expenses	23	(36)	(41)
Operating profit		**4,534**	**4,196**
Finance income	24	53	4
Finance costs	25	(957)	(947)
Finance result (net)		(904)	(943)
Profit before income tax		**3,630**	**3,253**
Income tax expense	26	(697)	(619)
PROFIT FOR THE YEAR		**2,933**	**2,634**
Other comprehensive income / (loss)			
Items that may be subsequently reclassified to profit or loss			
Cash flow hedge	16	(512)	2,813
Income tax recognised directly in other comprehensive income – cash flow hedge	26	98	(535)
TOTAL OTHER COMPREHENSIVE INCOME FOR THE YEAR		**(414)**	**2,278**
TOTAL COMPREHENSIVE INCOME FOR THE YEAR		**2,519**	**4,912**

The accompanying notes on pages 38 to 88 are an integral part of these consolidated financial statements.

NET4GAS Group
Consolidated Statement of Changes in Equity for the year ended 31 December 2018

In millions of Czech Crowns	Registered capital	Capital contributions outside registered capital	Cash flow hedges reserve	Retained earnings	Total
Balance as at 1 January 2017	**2,750**	**6,631**	**(1,813)**	**38**	**7,606**
Total comprehensive income					
Profit for 2017	–	–	–	2,634	2,634
Cash flow hedge – including related tax effect	–	–	2,278	–	2,278
Total comprehensive income for the year	–	–	2,278	2,634	4,912
Transactions with owners					
Decrease of contribution outside registered capital (Note 16)	–	(3,622)	–	–	(3,622)
Contribution outside registered capital (Note 16)	–	355	–	–	355
Dividends paid	–	–	–	(21)	(21)
Balance as at 31 December 2017	**2,750**	**3,364**	**465**	**2,651**	**9,230**
Total comprehensive income					
Profit for 2018	–	–	–	2,933	2,933
Cash flow hedge – including related tax effect	–	–	(414)	–	(414)
Total comprehensive income for the year	–	–	(414)	2,933	2,519
Transactions with owners					
Contribution outside registered capital (Note 16)	–	1,185	–	–	1,185
Advance dividends paid	–	–	–	(1,500)	(1,500)
Balance as at 31 December 2018	**2,750**	**4,549**	**51**	**4,084**	**11,434**

The accompanying notes on pages 38 to 88 are an integral part of these consolidated financial statements.

NET4GAS Group
Consolidated Statement of Cash Flows
for the year ended 31 December 2018

In millions of Czech Crowns	Note	2018	2017
Cash flows from operating activities			
Profit before tax		**3,630**	**3,253**
Adjustments for:			
Depreciation and amortisation	8, 9	1,891	2,013
Finance income	24	(53)	(4)
Finance costs	25	957	947
Gains less losses on disposals of property, plant and equipment		1	–
Other non-cash operating expenses / (gains)		44	(162)
thereof: *– employee benefit provision*		*17*	*29*
– release of unused provision		*(2)*	*(167)*
– other		*29*	*(24)*
Operating cash flows before working capital changes		**6,470**	**6,047**
Decrease / (Increase) in trade and other receivables	13, 14	(343)	(26)
Increase / (Decrease) in trade and other payables	21, 22	(304)	(20)
Decrease in inventories	11	(4)	2
Operating cash flows after changes in working capital		**5,819**	**6,003**
Interest paid	25	(648)	(614)
Interest received	24	5	1
Income tax paid	26	(636)	(1,108)
Net cash flows from operating activities		**4,540**	**4,282**
Cash flows from investing activities:			
Purchase of property, plant and equipment	8	(1,379)	(714)
Purchase of intangible assets	9	(27)	(30)
Loans provided to related parties	12	(3)	5
Purchase of other financial assets	14	(2,104)	(683)
Net cash flows used in investing activities		**3,513**	**(1,422)**

The accompanying notes on pages 38 to 88 are an integral part of these consolidated financial statements.

In millions of Czech Crowns	Note	2018	2017
Cash flows from financing activities:			
Payments of decreased contributions outside registered capital to the Company's shareholder	16	–	(3,000)
Payments of increased contributions outside registered capital from Company's shareholder	16	1,185	355
Advance dividends paid to the Company's shareholder	16	(1,500)	–
Repayments of borrowings	17	(659)	(7,927)
Proceeds from borrowings	17	618	7,928
Net cash flows from financing activities		**(356)**	**(2,644)**
Net increase / (decrease) in cash and cash equivalents		**671**	**216**
Cash and cash equivalents at the beginning of the period	15	631	415
Cash and cash equivalents at the end of the period	15	**1,302**	**631**

The accompanying notes on pages 38 to 88 are an integral part of these consolidated financial statements.

NET4GAS GROUP NOTES TO THE CONSOLIDATED FINANCIAL STATEMENTS

for the year ended 31 December 2018

1. NET4GAS Group and Its Operations – General Information

These consolidated financial statements have been prepared in accordance with International Financial Reporting Standards as adopted by the European Union for the year ended 31 December 2018 for NET4GAS, s.r.o. (the "Company" or "NET4GAS") and its subsidiary BRAWA, a.s. (the "Subsidiary" or "BRAWA") (jointly the "Group" or "NET4GAS Group").

The Company was incorporated and is domiciled in the Czech Republic, where the Group's principal place of business is also located. The Company is a limited liability company. It was incorporated on 29 June 2005 and has its registered office at Na Hřebenech II 1718/8, Prague 4 – Nusle, the Czech Republic. The Company's identification number is 272 60 364.

The subsidiary BRAWA, a.s. (joint stock company) was incorporated on 10 November 2010 as a 100% subsidiary of the Company and has its registered office at Na Hřebenech II 1718/8, Prague 4 – Nusle, the Czech Republic. The Subsidiary's primary business activity is the lease of the GAZELLE gas pipeline to the Company. The Subsidiary's identification number is 247 57 926.

The Group's main business activity is natural gas transmission in accordance with Act No. 458/2000 Coll. (the "Energy Act").

Since 2 August 2013, the Company has been fully owned by NET4GAS Holdings, s.r.o. ("NET4GAS Holdings"), incorporated in the Czech Republic, which is the Group's ultimate parent company. NET4GAS Holdings is a joint venture of two entities: Allianz Infrastructure Czech HoldCo II S.à r.l. (50%), with its registered office in Luxembourg, and Borealis Novus Parent B.V. (50%), with its registered office in the Netherlands.

The Statutory Directors of the Company:

As at 31 December 2018	As at 31 December 2017
Andreas Rau	Andreas Rau
Radek Benčík	Radek Benčík
Václav Hrach	Václav Hrach

The members of the Supervisory Board of the Company were as follows:

As at 31 December 2018	Function	As at 31 December 2017	Function
Kenton Edward Bradbury	Chairman	Kenton Edward Bradbury	Chairman
Jaroslava Korpancová	Member	Jaroslava Korpancová	Member
Mikhail Nahorny	Member	Mikhail Nahorny	Member
Andrew Cox	Member	Andrew Cox (since 11 May 2017)	Member
Georg Nowack (since 6 December 2018)	Member	Lenka Kovačovská	Member

Georg Nowack became a member of the Supervisory Board on 6 December 2018 and the change was registered in the Commercial Register on 14 January 2019.

Lenka Kovačovská was recalled from the Supervisory Board on 14 September 2018 and the change was registered in the Commercial Register on 9 October 2018.

About the Group. NET4GAS, s.r.o. is the exclusive gas transmission system operator in the Czech Republic, operating more than 3,800 km of gas pipelines. The NET4GAS Group is currently operating four compressor stations. The flow rate of the gas transmitted is measured at five border transfer stations (the Lanžhot, Brandov and Hora Svaté Kateřiny stations in the Czech Republic, and the Waidhaus and Olbernhau stations in the Federal Republic of Germany) and at almost a hundred national transfer stations. The NET4GAS

transmission system has been specifically targeted in the past few years for a number of new projects delivering additional transmission capacity and greater diversification of transmission routes. These projects have included the construction of the GAZELLE high-pressure gas pipeline (DN 1400, put in operation in 2013), connecting the transmission systems of the Czech Republic and the Federal Republic of Germany at the border points Brandov and Rozvadov, and a project connecting the Czech and Polish transmission systems in Český Těšín. The entire NET4GAS transmission system can also be used for reverse flow, which means that it now has the capacity and technology to cope with natural gas transmission in any direction. The largest project of the company is Capacity4Gas Project. The project is part of a larger initiative to provide secure and cost-efficient access to gas supplies via additional pipeline capacities, especially in the Baltic Sea. Simultaneously, the newly-created infrastructure in the Czech Republic will be made available to all interested market participants on a fully transparent and non-discriminatory basis for the transportation of any kind of natural gas regardless of its country of origin, be it Norway, Russia or North America. The Capacity4Gas project will contribute to enhancing the security of gas supplies in the Czech Republic and in the entire CEE region. In addition, the project will strengthen the Czech Republic's strategic role in cross/border gas transmission. The objective of the Capacity4Gas project is to build new gas infrastructure, most of which is to be located in the Ústí nad Labem and Pilsen regions. The aim of the project is to connect the gas infrastructure operated by NET4GAS with the planned EUGAL pipeline in Germany and to increase its capacity for the needs of gas supplies in the Czech Republic and further transit via Slovakia. The project will be implemented in two stages, with completion scheduled for 2019 and 2020, respectively.

The Company is the successor to Tranzitní plynovod, n. p., Transgas, a.s., and RWE Transgas Net, s.r.o.

The Company founded BRAWA, a.s. ("BRAWA"), as its subsidiary on 10 October 2010. Until 1 January 2013, BRAWA, a.s. had been a dormant company. On 1 January 2013, under the legal reorganisation of NET4GAS's business, the GAZELLE pipeline was transferred to BRAWA and BRAWA became the sole owner of the GAZELLE pipeline. The GAZELLE pipeline is operated by NET4GAS.

Structure of the Group as at 31 December 2018 and 2017:

Name	Activity	Percentage of voting rights	Ownership percentage	Country of registration
Subsidiary:				
BRAWA, a.s.	Owner of the GAZELLE natural gas pipeline which is rented to the Company	100%	100%	Czech Republic

With effect from 2015, the reporting period of BRAWA has ended on 30 November. The reporting period for 2018 started on 1 December 2017 and ended on 30 November 2018. In preparing the Group's consolidated financial statements as at 31 December 2018, the actual transactions of BRAWA for January–December 2018 and balances as at 31 December 2018 were used.

Note
The consolidated financial statements have been prepared in Czech and in English. In the event of differing interpretation of information, views or opinions, the Czech version of these consolidated financial statements takes precedence over the English version.

2. Operating Environment of the Group

The regulatory environment in the Czech Republic:

(a) Legal framework pertaining to the transmission system operator

The transmission system operator holds an exclusive gas transmission licence under the Energy Act, and its operations are regulated by the Energy Regulatory Office (the "ERO").

The transmission system operator's rights and obligations are primarily derived from Section 58 of the Energy Act and are clarified in more detail in the related implementing legislation. The transmission system operator is also required to comply with obligations under the European legislation, in particular Regulation (EC) No 715/2009 on conditions for access to the natural gas transmission networks and the related implementing legislation.

(b) Regulatory framework pertaining to the transmission system operator

Gas transmission prices are set annually by the ERO based on regulation methodology applicable in the regulatory period. Gas transmission prices for the next calendar year are usually published in an ERO's Pricing Decision by 30 November of the current year.

The 2018 gas transmission prices were established by ERO's Price Decision No 5/2017 of 21 November 2017, on Regulated Prices Related to Gas Supply.

(c) Current regulatory period

The transmission system operator is currently subject to regulatory period IV, which began on 1 January 2016 and ends on 31 December 2020 (the ERO extended the original three-year period by two years on 11 January 2018).

(d) Domestic transmission regulation methodology applicable in the fourth regulatory period

The transmission system operator regulation methodology for domestic gas transmission is based on a ceiling established for allowed revenues over a predetermined period (the revenue cap method).

Domestic gas transmission prices are subsequently derived from allowed revenues defined in this manner.

These prices consist of a fixed component for booked transmission capacity and a variable component depending on the amount of gas transmitted.

(e) Transit transmission regulation methodology applicable in the fourth regulatory period

The transmission system operator regulation methodology for transit transmission is subject to a price ceiling (of allowed prices) for a predetermined period (the price cap method). Allowed prices are set annually by the ERO based on a comparison of gas transmission prices in other relevant Member States of the European Union (benchmarking). The supporting documents for the benchmarking analysis are supplied by the transmission system operator.

(f) Unregulated part

Further to a decision of the ERO of 28 July 2011, the GAZELLE interconnecting pipeline was exempted from the obligation to grant third-party access at a regulated price under the conditions set out in the Energy Act.

3. Summary of Significant Accounting Policies

a) Basis of preparation

These consolidated financial statements of the Group have been prepared in accordance with International Financial Reporting Standards as adopted by the European Union ("IFRS") under the historical cost convention, as modified by the revaluation of relevant financial assets and financial liabilities (including derivative instruments) carried at fair value. The principal accounting policies applied in the preparation of these consolidated financial statements are set out below. These policies have been consistently applied to all the periods presented.

Preparation of financial statements in conformity with IFRS requires the use of certain critical accounting estimates. It also requires management to exercise its judgement in the process of applying the Group's accounting policies. The areas involving a higher degree of judgment or complexity, or areas where assumptions and estimates are significant to the consolidated financial statements are disclosed in Note 4.

Presentation currency. These consolidated financial statements ("financial statements") are presented in Czech Crowns ("CZK") which is also the functional currency of both Group entities.

b) Consolidation

Subsidiaries are investees, including structured entities, over which the Group exercises control. In assessing whether the Group controls an investee, the decisive factor is whether the Group has exposure, or rights, to variable returns from its involvement in the investee and may use its power over the investee to affect the returns.

Subsidiaries are consolidated from the date on which control is transferred to the Group (acquisition date) and are deconsolidated from the date on which control ceases.

Intercompany transactions, balances and unrealised gains on transactions between Group entities are eliminated from consolidation; unrealised losses are also eliminated unless the cost cannot be recovered. The Company and all of its subsidiaries use uniform accounting policies consistent with the Group's policies.

c) Financial instruments – key measurement terms

Depending on their classification, financial instruments are carried at fair value or amortised cost as described below.

Fair value is the price that would be received to sell an asset or paid to transfer a liability in an orderly transaction between market participants at the measurement date. The best evidence of fair value is a price in an active market. An active market is one in which transactions for the asset or liability take place with sufficient frequency and volume to provide pricing information on an ongoing basis.

All purchases and sales of financial assets that require delivery within the time frame established by regulation or market convention ("regular way" purchases and sales) are recorded at the trade date, which is the date on which the Group commits to deliver the financial asset. All other purchases are recognised when the entity becomes a party to the contractual provisions of the instrument.

Fair value of financial instruments traded in an active market is measured as the product of the quoted price for the individual asset or liability and the quantity held by the entity. This is the case even if a market's normal daily trading volume is not sufficient to absorb the quantity held and placing orders to sell the position in a single transaction might affect the quoted price.

A portfolio of financial derivatives that are not traded in an active market is measured at the fair value of a group of financial assets and financial liabilities on the basis of the price that would be received to sell a net long position (i.e. an asset) for a particular risk exposure or paid to transfer a net short position (i.e. a liability) for a particular risk exposure in an orderly transaction between market participants at the measurement date. This is applicable for assets carried at fair value on a recurring basis if the Group:

(a) manages the group of financial assets and financial liabilities on the basis of the Group's net exposure to a particular market risk (or risks) or to the credit risk of a particular counterparty in accordance with the entity's documented risk management or investment strategy; (b) it provides information on that basis about the group of assets and liabilities to the Group's key management personnel; and (c) the market risks, including duration of the entity's exposure to a particular market risk (or risks) arising from the financial assets and financial liabilities is substantially the same.

Fair value measurements are analysed in the fair value level hierarchy as follows (Note 31):

(i) Level one are measurements at quoted prices (unadjusted) in active markets for identical assets or liabilities, (ii) level two measurements are valuations techniques with all material inputs observable for the asset or liability, either directly (that is, as prices) or indirectly (that is, derived from prices), and (iii) level three measurements are valuations not based solely on observable market data (that is, the measurement requires significant unobservable inputs). Transfers between levels of the fair value hierarchy are deemed to have occurred at the end of the reporting period.

Transaction costs are incremental costs that are directly attributable to the acquisition, issue or disposal of a financial instrument. An incremental cost is one that would not have been incurred if the transaction had not taken place. Transaction costs include fees and commissions paid to agents (including employees acting as selling agents), advisors, brokers and dealers, levies by regulatory agencies and securities exchanges, and transfer taxes and duties. Transaction costs do not include debt premiums or discounts, financing costs or internal administrative or holding costs.

Amortised cost is the amount at which the financial instrument was recognised at initial recognition less any principal repayments, plus accrued interest, and for the gross carrying amount of financial assets less expected credit losses. Accrued interest includes amortisation of transaction costs deferred at initial recognition and of any premium or discount to maturity amount using the effective interest method. Accrued interest income and accrued interest expense, including both accrued coupon and amortised discount or premium (including fees deferred at origination, if any), are not presented separately and are included in the carrying amounts of related items in the balance sheet.

The effective interest method is a method of allocating interest income or interest expense over the relevant period, so as to achieve a constant periodic rate of interest (effective interest rate) on the carrying amount. The effective interest rate is the rate that exactly discounts estimated future cash payments or receipts (excluding future credit losses) through the expected life of the financial instrument to the net carrying amount of the financial instrument. The effective interest rate discounts cash flows of variable interest instruments to the next interest repricing date, except for the premium or discount which reflects the credit spread over the floating rate specified in the instrument, or other variables that are not reset to market rates. Such premiums or discounts are amortised over the whole expected life of the instrument. The present value calculation includes all fees paid or received between parties to the contract that are an integral part of the effective interest rate.

d) Classification of financial assets

Financial assets are classified in the following categories:

- Financial assets measured at amortised cost (AC)
- Financial assets measured at fair value:
  - through other comprehensive income (FVTOCI)
  - through profit or loss (FVTPL)

Financial assets measured at amortised cost (AC):

Debt instruments are measured at amortised cost if they meet the following two criteria:

- Business model test: the objective is to hold the financial asset to collect the contractual cash flows (rather than to sell the instrument prior to its contractual maturity to realise its fair value changes).
- Cash flow characteristics test: contractual cash flows from a financial asset are solely payments of principal and interest, where the most significant elements of interest only include the time value of money, credit risk of the counterparty, other basic lending costs (for example, liquidity and administration) and a reasonable profit margin.

Financial assets measured at fair value through profit or loss:

Financial assets at fair value through profit or loss, including financial derivatives are carried at their fair value. All derivative instruments are carried as assets when fair value is positive and as liabilities when fair value is negative. The method of recognising the resulting gain or loss depends on whether the derivative is designated as a hedging instrument, and if so, the nature of the item being hedged. The Group designates certain derivatives as hedges of a particular risk associated with a fixed commitment or highly probable forecast transaction (cash flow hedge).

The Group documents at the inception of the transaction the relationship between hedging instruments and hedged items, as well as its risk management objectives and strategy for undertaking various hedging transactions. The Group also documents its assessment, both at hedge inception and on an ongoing basis, of whether the derivatives that are used in hedging transactions are highly effective in offsetting changes in fair values or cash flows of hedged items.

The fair values of various derivative instruments used for hedging purposes are disclosed in Note 34. Movements on the hedging reserve in other comprehensive income are shown in Note 16. The full fair value of a hedging derivative is classified as a non-current asset or liability when the remaining maturity of the hedged item is more than 12 months, and as a current asset or liability when the remaining maturity of the hedged item is less than 12 months. Trading derivatives are classified as a current asset or liability.

Cash flow hedge: The effective portion of changes in the fair value of derivatives that are designated and qualify as cash flow hedges is recognised in other comprehensive income. The gain or loss relating to the ineffective portion is recognised immediately in the profit or loss within 'Finance costs' or 'Finance income'. Amounts accumulated in equity are reclassified to profit or loss in the periods when the hedged item affects profit or loss (for example, when the forecast sale that is hedged takes place). The gain or loss relating to the effective portion of cross currency interest rate swaps hedging currency risk is recognised in profit or loss under revenues (in respect of a foreign-currency revenues hedge) or within 'Finance income' or 'Finance costs' (in respect of a cash flow hedge relating to issued foreign-currency bonds).

When a hedging instrument expires or is sold, or when a hedge no longer meets the criteria for hedge accounting, any cumulative gain or loss existing in equity at that time remains in equity and is recognised in profit or loss when the forecast transaction is ultimately recognised in profit or loss. When a forecast transaction is no longer expected to occur, the cumulative gain or loss that was recorded in other comprehensive income is immediately transferred to profit or loss within 'Finance costs' or 'Finance income'.

The Group does not hold any financial assets measured at FVTOCI.

e) Classification of financial liabilities

Financial liabilities have the following measurement categories: (a) held for trading which also includes financial derivatives, and (b) other financial liabilities. Liabilities held for trading are carried at fair value with changes in value recognised in profit or loss for the year (as finance income or finance costs) in the period in which they arise. Other financial liabilities are carried at amortised cost.

The Group designates certain financial liabilities as hedges of a particular risk associated with highly probable forecast transactions (cash flow hedge – Note 29, section 'Currency Risk').

f) Initial recognition of financial instruments

Financial instruments not carried at fair value through profit or loss are initially recognised at fair value plus transaction costs. Financial instruments carried at fair value through profit or loss are initially recognised at fair value, and transaction costs are expensed in profit or loss. Fair value at initial recognition is best evidenced by the transaction price. A gain or loss on initial recognition is only recorded if there is a difference between fair value and transaction price which can be evidenced by other observable current market transactions in the same instrument or by a valuation technique whose inputs include only data from observable markets.

The Group uses discounted cash flow valuation techniques to determine the fair value of cross-currency interest rate swaps and loans that are not traded in an active market. Differences may arise between the fair value at initial recognition determined at initial recognition using the valuation techniques and the transaction price. Any such differences are amortised on a straight line basis over the term of the cross-currency interest rate swaps and loans to related parties.

g) Derecognition of financial assets and financial liabilities

The Group derecognises financial assets when (a) the assets are redeemed or the rights to cash flows from the assets otherwise expire or (b) the Group has transferred the rights to the cash flows from the financial assets or entered into a qualifying pass-through arrangement while (i) also transferring substantially all risks and rewards of ownership of the assets or (ii) neither transferring nor retaining substantially all risks and rewards of ownership but not retaining control.

Control is retained if the counterparty does not have the practical ability to sell the asset in its entirety to an unrelated third party without needing to impose additional restrictions on the sale.

If the financial asset is fully derecognised, it is recognised through profit or loss as a gain or loss on sale equal to the difference between the carrying amount of the asset and the payment received.

The Group derecognises financial liabilities only when the contractual liabilities of the Group are discharged, cancelled or expire (or when the terms of the existing liability or a part thereof are significantly modified). The difference between the carrying amount of a derecognised financial liability and the consideration paid or payable is recognised in profit or loss.

h) Property, plant and equipment

Property, plant and equipment are stated at cost, less accumulated depreciation and provision for impairment, where required.

Significant spare parts are recognised and treated as property, plant and equipment.

Repairs and maintenance expenditures are expensed as incurred. Cost of replacing major parts or components of property, plant and equipment items are capitalised and the replaced part is retired. Subsequent costs are included in the asset's carrying amount or recognised as a separate asset, as appropriate, only when it is probable that future economic benefits associated with the item will flow to the Group and the cost of the item can be measured reliably.

At the end of each reporting period management assesses whether there is any indication of impairment of property, plant and equipment. If any such indication exists, management estimates the recoverable amount, which is determined as the higher of an asset's fair value less costs to sell and its value in use.

The carrying amount is reduced to the recoverable amount and the impairment loss is recognised in profit or loss for the year. An impairment loss recognised for an asset in prior years is reversed where appropriate if there has been a change in the estimates used to determine the asset's value in use or fair value less costs to sell.

Gains and losses on disposals are determined by comparing proceeds with the carrying amount and are recognised in profit or loss for the year.

When the Group recognises the cost of a replacement as part of the carrying amount of property, plant and equipment, it derecognises the carrying amount of the replaced part regardless of whether the replaced part had been depreciated separately. If it was not practicable to determine the carrying amount of the replaced part, the Group used the cost of the replacement as an indication of what the cost of the replaced part was at the time it was acquired or constructed.

i) Depreciation

Land is not depreciated. Construction in progress is not depreciated. Depreciation on other assets is calculated using the straight-line method. Depreciation rates are determined based on estimated useful lives:

	Useful lives
Buildings and constructions	30 – 70 years
Plant, machinery and equipment	4 – 40 years
Furniture and fittings	4 – 8 years
Motor vehicles	5 – 8 years

The assets' residual values and useful lives are reviewed, and adjusted if appropriate, at the end of each reporting period.

j) Capitalisation of borrowing costs

General and specific borrowing costs directly attributable to the acquisition, construction or production of assets that are not carried at fair value and that necessarily take a substantial time to get ready for the intended use or sale (qualifying assets) are capitalised as part of the costs of those assets.

The commencement date for capitalisation is when (a) the Group incurs expenditures for the qualifying asset; (b) it incurs borrowing costs; and (c) it undertakes activities that are necessary to prepare the asset for its intended use or sale.

Capitalisation of borrowing costs continues up to the date when the assets are substantially ready for their use or sale.

The Group capitalises borrowing costs that could have been avoided if it had not made capital expenditure on qualifying assets. Borrowing costs capitalised are calculated at the Group's average funding cost (the weighted average interest cost is applied to the expenditures on the qualifying assets), except to the extent that funds are borrowed specifically for the purpose of obtaining a qualifying asset. Where this occurs, actual borrowing costs incurred on the specific borrowings less any investment income on the temporary investment of these borrowings are capitalised. The amounts of borrowing costs capitalised during the current and previous year are disclosed in Note 8.

k) Leasing

Operating leases. Where the Group is a lessee in a lease which does not transfer substantially all the risks and rewards incidental to ownership from the lessor to the Group, the total lease payments are charged to profit or loss for the year on a straight-line basis over the lease term. The lease term is the non-cancellable period for which the lessee has contracted to lease the asset together with any further terms for which the lessee has the option to continue to lease the asset, with or without further payment, when at the inception of the lease it is reasonably certain that the lessee will exercise the option.

Finance lease liabilities. Where the Group is a lessee in a lease which transfers substantially all the risks and rewards incidental to ownership to the Group, the assets leased are capitalised in property, plant and equipment at the commencement of the lease at the lower of the fair value of the leased asset and the present value of the minimum lease payments. Each lease payment is allocated between the liability and finance charges so as to achieve a constant rate on the finance balance outstanding. The corresponding rental obligations, net of future finance charges, are included in borrowings. The interest cost is charged to profit or loss over the lease period using the effective interest method. The assets acquired under finance leases are depreciated over the shorter of their useful life or the lease term, if the Group is not reasonably certain that it will obtain ownership by the end of the lease term.

l) Intangible assets

The Group's intangible assets primarily include capitalised computer software, patents, trademarks and licences.

Acquired computer software licences, patents and trademarks and other intangibles are capitalised on the basis of the costs incurred to acquire and bring them to use.

Development costs that are directly associated with identifiable and unique software controlled by the Group are recorded as intangible assets if an inflow of incremental economic benefits exceeding costs is probable. Capitalised costs include staff costs of the software development team and an appropriate portion of relevant overheads. All other costs associated with computer software, e.g. its maintenance, are expensed when incurred.

m) Amortisation

Intangible assets are amortised using the straight-line method over their useful lives (unless the agreement or licence conditions state shorter or longer period):

	Useful lives
Software	3 years
Patents, and other licences	1.5 – 6 years
Development costs	6 years
Other intangible assets	6 years

n) Emission rights

The Group receives free emission rights as a result of the European Emission Trading Schemes. The rights are received on an annual basis and in return the Group is required to return rights equal to its actual emissions. Therefore, a provision is only recognised when actual emissions exceed the emission rights received free of charge. The emission rights which were granted free of charge are carried at cost, i.e. at zero. When emission rights are purchased from third parties, they are measured at cost and treated as a reimbursement right. When emission rights are acquired by exchange and such an exchange is deemed to have an economic substance, they are measured at fair value as at the date when they become available for use and the difference between the fair value of rights received and cost of assets given up is recognised through profit or loss. The Group did not recognise any provision resulting from gas emissions as at 31 December 2018 and 31 December 2017.

The amounts of emission rights held in zero value by the Group were as follows:

In tons	31 December 2018	31 December 2017
Emission rights	382,601	391,912

o) Impairment of non-financial assets

Intangible assets not ready to use are not subject to amortisation and are tested annually for impairment. Assets that are subject to depreciation and amortisation are reviewed for impairment whenever events or changes in circumstances indicate that the carrying amount may not be recoverable. An impairment loss is recognised for the amount by which the asset's carrying amount exceeds its recoverable amount. The recoverable amount is the higher of an asset's fair value less costs of disposal and value in use. For the purposes of assessing impairment, assets are grouped at the lowest levels for which there are largely independent cash inflows (cash-generating units). Prior impairments of non-financial assets are reviewed for possible reversal at each reporting date.

p) Assets held for sale

Assets (or disposal groups) are classified as assets held for sale and stated at the lower of their residual amount and fair value less costs to sell if their carrying amount is to be recovered principally through a sale transaction rather than through continuing use. Non-current assets held for sale are not depreciated.

q) Taxes

Income tax

Income taxes have been provided for in the financial statements in accordance with legislation enacted or substantively enacted by the end of the reporting period. The income tax charge/credit comprises current tax and deferred tax and is recognised in profit or loss for the year, except if it is recognised in other comprehensive income or directly in equity because it relates to transactions that are also recognised, in the same or a different period, in other comprehensive income or directly in equity (for example the effective portion of changes in the fair value of financial derivatives that are designated and qualify as cash flow hedges).

Current tax is the amount expected to be paid to, or recovered from, the taxation authorities in respect of taxable profits or losses for the current and prior periods. Taxable profits or losses are based on estimates if financial statements are authorised prior to filing relevant tax returns. Taxes other than on income are recorded within operating expenses.

Deferred income tax is provided using the balance sheet liability method for tax loss carry forwards and temporary differences arising between the tax bases of assets and liabilities and their carrying amounts for financial reporting purposes. In accordance with the initial recognition exemption, deferred taxes are not recorded for temporary differences on initial recognition of an asset or a liability in a transaction other than a business combination if the transaction, when initially recorded, affects neither accounting nor taxable profit. Deferred tax balances are measured at tax rates (and tax legislation) enacted or substantively enacted at the end of the reporting period, which are expected to apply to the period when the temporary differences will reverse or the tax loss carry forwards will be utilised. Deferred tax assets and liabilities are only offset among the Group's individual entities. Deferred tax assets for deductible temporary differences and tax loss carry forwards are recorded only to the extent that it is probable that future taxable profit will be available against which the deductions can be utilised.

The Group controls the reversal of temporary differences relating to taxes chargeable on dividends from subsidiaries or on gains upon their disposal. The Group does not recognise deferred tax liabilities on such temporary differences except to the extent that management expects the temporary differences to reverse in the foreseeable future.

Value added tax

Output value added tax (VAT) related to sales is payable to tax authorities on the earlier of (a) collection of receivables from customers or (b) delivery of goods or services to customers. Input VAT is generally recoverable against output VAT upon receipt of the VAT invoice. The tax authorities permit the settlement of VAT on a net basis. VAT related to sales and purchases is recognised in the balance sheet on a net basis. Where provision has been made for impairment of receivables, impairment loss is recorded for the gross amount of the debtor, including VAT.

r) Uncertain tax positions

The Group's uncertain tax positions are reassessed by management at the end of each reporting period. Liabilities are recorded for income tax positions that are determined by management as more likely than not to result in additional taxes being levied if the positions were to be challenged by the tax authorities. The assessment is based on the interpretation of tax laws that have been enacted or substantively enacted by the end of the reporting period, and any known court or other rulings on such issues. Liabilities for penalties, interest and taxes other than on income are recognised based on management's best estimate of the expenditure required to settle the obligations at the end of the reporting period.

s) Inventories

Raw materials are mainly spare parts for the gas pipeline system. Purchased inventories are stated at the lower of cost and net realisable amount. Cost includes all costs related with its acquisition (mainly transport costs, customs duty, etc.). The weighted average cost method is applied for disposals of purchased inventories. Net realisable value is the estimated selling price in the ordinary course of business, less the estimated cost of completion and selling expenses. Significant spare parts are recognised and treated as property, plant and equipment.

t) Trade receivables

Trade receivables are carried at nominal value less expected credit loss.

u) Impairment of financial assets carried at amortised cost

Impairment of financial assets is recognised using a model that is based on expected losses, and is recognised through profit or loss as expected loss on a financial asset over its useful life. The model is based on an estimated allowance based on historical experience and takes into account the future economic development and performance of business partners.

For 'Trade and other receivables' and 'Loans to related parties', the Group assesses asset impairment based on the 12-month expected loss, unless credit risk significantly increased at the balance sheet date. An increase in credit risk is deemed to be significant if:

- Any portion or instalment is overdue for more than 30 days and the late payment cannot be attributed to a delay caused by the settlement systems;
- The counterparty experiences serious financial difficulties as evidenced by its financial information that the Group obtains;
- The counterparty is considering bankruptcy or a financial reorganisation;
- There is adverse change in the payment status of the counterparty as a result of changes in the national or local economic conditions that impact the counterparty.

In the event of a significant increase of credit risk, the Group assesses the impairment of the asset based on expected loss until the maturity date of the asset.

Trade and other receivables and provided loans are considered to be impaired if:

- Any portion or instalment is overdue for more than 90 days and the late payment cannot be attributed to a delay caused by the settlement systems;
- The counterparty experiences financial difficulties as evidenced by its financial information that the Group obtains;
- The counterparty has undergone a financial reorganisation or is insolvent;
- There is adverse change in the payment status of the counterparty as a result of changes in the national or local economic conditions that impact the counterparty.

In respect of financial assets in default, the Group assessed the impairment of the asset based on the expected loss until the maturity date of the asset.

The Group assesses the expected credit loss also on an individual basis – for VNG please refer to Note 4 'Critical Accounting Estimates and Judgements in Applying Accounting Policies'.

The Group does not account for impairment losses if their impact on the financial statements is deemed to be immaterial.

If the terms of an impaired financial asset held at amortised cost are renegotiated or otherwise modified because of financial difficulties of the counterparty, impairment is measured using the original effective interest rate before the modification of terms. The renegotiated asset is then derecognised and a new asset is recognised at its fair value only if the risks and rewards of the asset substantially changed. This is normally evidenced by a substantial difference between the present values of the original cash flows and the new expected cash flows.

If, in a subsequent period, the amount of the impairment loss decreases, the previously recognised impairment loss is reversed by adjusting the allowance account through profit or loss for the year.

Uncollectible assets are written off against the related impairment loss provision after all the necessary procedures to recover the asset have been completed and the amount of the loss has been determined. Subsequent recoveries of amounts previously written off are credited to impairment loss account within the profit or loss for the year.

v) Deferred expenses and prepayments

Deferred expenses and prepayments are carried at cost less allowances. Deferred expenses and prepayments are classified as non-current when the goods or services relating to them are expected to be obtained after more than one year, or when the deferred expenses relate to an asset which will itself be classified as non-current upon initial recognition. Prepayments to acquire assets are transferred to the carrying amount of the asset once the Group has obtained control of the asset and it is probable that future economic benefits associated with the asset will flow to the Group. Other prepayments and deferred expenses are written off to profit or loss when the goods or services relating to the prepayments are received. If there is an indication that the assets, goods or services relating to a prepayment will not be received, the carrying value of the prepayment is written down accordingly and a corresponding impairment loss is recognised in profit or loss for the year.

w) Cash and cash equivalents

Cash and cash equivalents include cash in hand, deposits held at call with banks, and other short-term highly liquid investments with maturities of three months or less from initial recognition. Cash and cash equivalents are carried at amortised cost using the effective interest method.

Cash and cash equivalents are held for the purpose of meeting short-term cash commitments rather than for investment or other purposes. Deposit bills of exchange with original maturity of less than three months from initial recognition are therefore classified as 'Other financial assets'.

x) Dividends

Dividends are recorded as a liability and deducted from equity in the period in which they are declared and approved. Any dividends declared after the reporting period and before the financial statements are authorised for issue are disclosed in Note 32 'Subsequent events'.

y) Advance dividends paid

The Group's decision to pay an advance dividend is reflected in the financial statements as a decrease in equity at the date of the payment and is reported in the 'Retained earnings' balance sheet line.

z) Borrowings

Borrowings are carried at amortised cost using the effective interest method.

At their initial recognition, all bank credits, loans and issued bonds are recorded at their purchase price corresponding to the fair value of the received cash funds, less the costs of obtaining the credit or loan or issue of bonds.

Amortised cost is determined by taking into account the costs of obtaining the credit or loan, as well as the discounts or bonuses received at the settlement of the liability.

The Group designates certain borrowings as hedges of a particular risk associated with a highly probable forecast transaction (cash flow hedge – Note 29, section 'Currency risk').

aa) Government and other grants

Grants from the government and the European Commission are recognised at their fair value where there is a reasonable assurance that the grant will be received and the Group will comply with all attached conditions. Grants relating to the purchase of property, plant and equipment decrease directly the costs of the relevant asset.

bb) Trade and other payables

Trade payables are accrued when the counterparty performs its obligations under the contract and are carried at amortised cost using the effective interest method.

cc) Provisions for liabilities and charges

Provisions for liabilities and charges are non-financial liabilities of uncertain timing or amount. They are accrued when the Group has a present legal or constructive obligation as a result of past events, it is probable that an outflow of resources embodying economic benefits will be required to settle the obligation, and a reliable estimate of the amount of the obligation can be made.

Where there are a number of similar obligations, the probability that an outflow will be required in settlement is determined by considering the class of obligations as a whole.

dd) Financial guarantees

Financial guarantees are irrevocable contracts that require the Group to make specified payments to reimburse the holder of the guarantee for a loss it incurs because a specified debtor fails to make payment when due in accordance with the terms of a debt instrument. Financial guarantees are initially recognised at their fair value, which is normally evidenced by the amount of fees received. When the Group expects to receive recurring future premiums from an issued financial guarantee contract, the guarantee is recorded at the premium receivable at the inception of the contract and no receivable is recognised in respect of the future premium payments receivable. The premium receivable in one instalment is amortised on a straight line basis over the period covered by that instalment. At the end of each reporting period, the premium receivable in respect of the respective period is measured at its present value and the financial liability is measured at the higher of the remaining unamortised balance and the best estimate of expenditure required to settle the obligation at the end of the reporting period.

ee) Asset retirement obligations

The Group's transmission system is mainly constructed on land owned by third parties. The current legislation requires the Group to bear the costs related to the transmission system's operation and maintenance. The current Czech environmental and energy legislation does not set the obligation to dispose of the assets at the end of their useful life. Given the applicable legislation, management believes that there is no asset retirement obligation (dismantling and removing an item of property, plant and equipment) to be recognised in the financial statements.

ff) Foreign currency translation

The functional currency of each consolidated entity within the Group is the currency of the primary economic environment in which the entity operates. The functional currency of the Group and its subsidiary is Czech Crowns ("CZK") and the Group's presentation currency is also CZK.

Monetary assets and liabilities are translated into each entity's functional currency at the official exchange rate of the Czech National Bank ("CNB") at the respective end of the reporting period. Foreign exchange gains and losses resulting from transactions and from the translation of monetary assets and liabilities denominated in foreign currencies into each entity's functional currency at year-end official exchange rates of the CNB are recognised in profit or loss under 'Net foreign exchange rate gains or losses'. Translation at year-end rates does not apply to non-monetary items that are measured at historical cost. Non-monetary items measured at fair value in a foreign currency, including equity investments, are translated using the exchange rates at the date when the fair value was determined. Effects of exchange rate changes on non-monetary items measured at fair value in a foreign currency are recorded as part of the fair value gain or loss.

gg) Revenue recognition

The Group primarily provides transmission services: cross-border transmission of natural gas via the Czech Republic and domestic transmission of natural gas to partners in the

Czech Republic. Auxiliary services to gas infrastructure operators primarily include maintenance and dispatching.

The Group recognises revenues once it has fulfilled (as it fulfils) its supply commitment by transferring the promised goods or service (the "asset") to the customer. The asset is transferred (being transferred) once the customer has gained (as it gains) control over the asset. In determining the transaction price, the Group considers the terms of the contracts and its standard business practice. The transaction price is the amount of consideration to which the Group is, in its view, entitled in exchange for the transfer of the promised goods or service to the customer, with the exception of amounts collected on behalf of third parties. The consideration promised in the contract with the customer may include fixed amounts, variable amounts, or both.

Each contract includes promises to transfer goods or services to a customer that are distinct. These promises are single performance obligations and are therefore accounted for separately and the entire transaction price is allocated to the single performance obligation.

Revenue from gas transmission services is recognised over time based on the reserved capacity as the customer receives control and consumes the benefits provided by the Group's performance as the Group performs. Revenues are usually invoiced on a monthly, quarterly or annual basis and sales are shown net of VAT and discounts. Revenues are measured at the fair value of the consideration received or receivable.

The fee for services determined in the contract with the customer is always specified for each supply (provided service). Revenues from natural gas transmission via the Czech Republic and from domestic gas transmission to partners in the Czech Republic are regulated by the Energy Regulatory Office.

hh) Employee benefits

Wages, salaries, contributions to the Czech state pension and social insurance funds, paid annual leave and sick leave, bonuses, and non-monetary benefits (such as health services and other services) are accrued in the year in which the associated services are rendered by the employees of the Group.

a) Pension obligations

A defined contribution plan is a pension plan under which the Group pays fixed contributions into a separate entity. The Group has no legal or constructive obligations to pay further contributions if the fund does not hold sufficient assets to pay all employees the benefits relating to employee service in the current and prior periods. A defined benefit plan is a pension plan that is not a defined contribution plan.

For defined contribution plans, the Group pays contributions to publicly or privately administered pension insurance plans on a mandatory, contractual or voluntary basis. The Group has no further payment obligations once the contributions have been paid. The contributions are recognised as employee benefit expense when they are due.

b) Termination benefits

Termination benefits are payable when employment is terminated by the Group before the normal retirement date, or whenever an employee accepts voluntary redundancy in exchange for these benefits. The Group recognises termination benefits at the earlier of the following dates: (a) when the Group can no longer withdraw the offer of those benefits; and (b) when the entity recognises costs for a restructuring that is within the scope of IAS 37 and involves the payment of termination benefits. In the case of an offer made to encourage voluntary redundancy, the termination benefits are measured based on the number of employees expected to accept the offer. Benefits falling due more than 12 months after the end of the reporting period are discounted to their present value.

c) Other long term benefits

Long-term employee benefits, such as long-term bonuses, and long service awards are accounted for and measured using the projected unit credit method in the same way as defined benefit pension plan, with the exception that remeasurements (actuarial gains/losses) and related charges are recognised immediately through profit or loss.

ii) Offsetting of financial assets and financial liabilities

Financial assets and liabilities are offset and the net amount reported in the balance sheet only when there is a legally enforceable right to offset the recognised amounts, and there is an intention to either settle on a net basis, or to realise the asset and settle the liability simultaneously. Such a right of set off (a) must not be contingent on a future event and (b) must be legally enforceable in all of the following circumstances: (i) in the normal course of business, (ii) in the event of default and (iii) in the event of insolvency or bankruptcy.

jj) Segment reporting

Operating segments are components that engage in business activities that may earn revenues or incur expenses, whose operating results are regularly reviewed by the chief operating decision maker (CODM) and for which discrete financial information is available. The CODM is the person or group of persons who allocates resources to the operating segments of the Group and assesses its performance. Segments are reported in a manner consistent with the internal reporting provided to the Group's chief operating decision maker. Segments whose revenue, result or assets are ten percent or more of all the segments are reported separately.

4. Critical Accounting Estimates and Judgements in Applying Accounting Policies

The Group makes estimates and assumptions that affect the amounts recognised in the financial statements and the carrying amounts of assets and liabilities within the next financial year. Estimates and judgements are continually evaluated and are based on management's experience and other factors, including expectations of future events that are believed to be reasonable under the circumstances. Management also makes certain judgements, apart from those involving estimations, in the process of applying the accounting policies. Judgements that have the most significant effect on the amounts recognised in the financial statements and estimates that can cause a significant adjustment to the carrying amount of assets and liabilities within the next financial year include:

Functional currency

Management assessed the relevant primary and secondary factors during the consideration about the Group's functional currency. The functional currency is the currency of the primary economic environment, in which the entity operates. The regulated sales prices of the Group are determined by the ERO – the Czech Regulatory Office – and are defined in CZK. The majority of the entity's revenue stems from regulated sales. The majority of the Group's operating expenses are incurred in CZK. Capital expenditures are twofold: regular capital expenditure safeguarding the existing system and its operational safety; and large one-off projects. The regular capital expenditure is almost entirely incurred in CZK, while the cost of large one-off projects is incurred in a mixture of currencies (including CZK, EUR and other). Cash from financing activities is generated in a mixture of currencies (including CZK, EUR and USD). Although the Group's operations are influenced by a mixture of currencies, management concluded that the majority of the indicators support CZK as the functional currency of the Group. The functional currency of BRAWA is affected by the functional currency of NET4GAS, the reason being that BRAWA does not perform its activities in a fully autonomous manner. In fact, it is more of an extension of the Group's activities.

Classification of pipeline capacity contracts

The Group entered into long-term contracts expiring on 1 January 2021 and 1 January 2035 whereby it provided the majority of its GAZELLE pipeline capacity on a 'ship-or-pay' basis. Management considered whether the contract for the provision of pipeline capacity to its major customer is a lease contract. Management's conclusion that the contract is not a lease of the pipeline is based on the fact that there is significant (although minority) capacity of the pipeline which is available to other customers and this capacity can be used by the other customers. The pipeline is under the Group's full control and the major customer has no ability or right to control physical access to the pipeline. Therefore, the arrangement is not a lease contract under IFRS. The Group treats the pipeline as part of its property, plant and equipment and recognises revenue from the contract with the major customer in accordance with IAS 15.

Capacity of the Capacity4Gas system

New cross-border capacity was offered and successfully marketed at the annual capacity auction on 6 March 2017. The Group launched the implementation phase of a new project entitled Capacity4Gas. The objective of the project is to build new gas infrastructure within the NET4GAS transmission system. The Capacity4Gas project is executed in two stages, the completion of which is planned for 2019 and 2020. Manage-

ment considered whether the new contract for the provision of pipeline capacity to its major customer is a lease contract. Management's conclusion that the contract is not a lease of the pipeline is based on the fact that there is significant (although minority) capacity of the pipeline which is available to other customers and this capacity can be used by the other customers. The pipeline is under the Group's full control and the major customer has no ability or right to control physical access to the pipeline. Therefore, the arrangement is not a lease contract under IFRS.

Transmission System Operator licence and gas pipelines
Considering the applicability of IFRIC 12 to the Group, management believes that the requirements for state regulation have not been met as the title will never be transferred to the government nor can the government control the operator's practical ability to sell or pledge the infrastructure and the government is not controlling the construction process. Therefore the Group's system is classified as property, plant and equipment and is not treated as infrastructure used in public-to-private service concession arrangements.

Segments
Operating segments are components that engage in business activities that may earn revenues or incur expenses, whose operating results are regularly reviewed by the chief operating decision maker (CODM) and for which discrete financial information is available. The CODM is the person or group of persons who allocates resources to the operating segments of the Group and assesses its performance. Recurring revenues are generated from contracts with foreign as well as domestic customers. Information for the CODMs (the Company's Statutory Directors) who are responsible for allocating resources and assessing the Group's performance is prepared for the whole Group without any particular structuring. Management regularly obtain information with assessment of the split of revenue between the transit revenue and domestic transmission revenue. There is no profit measure which would be based on similar basis. All profit measures used by the CODMs are based on the results of the Group considered as one business unit. As a result, management consider the whole Group as one segment for the purpose of segment reporting.

Unpaid receivable – Arbitration court
Since October 2016, no monthly fees have been paid under one of the contracts with customers. An arbitration claim was filed on 26 April 2017 and the arbitration procedure is pending. At the financial statements preparation date, the arbitration procedure had yet to be concluded. However, the Group believes it has a solid case and its chance of success is very good. The total unpaid receivable at 31 December 2018 is CZK 235 million (31 December 2017: CZK 129 million), and no allowance has been recognised for it as management believes that the receivable will be fully recovered.

5. Adoption of New or Revised Standards and Interpretations and New Accounting Pronouncements

a) Application of new standards and interpretations effective on or after 1 January 2018

In the current year, the Group has applied new and amended IFRS Standards issued by the International Accounting Standards Board (IASB) and adopted by the EU that are mandatorily effective in EU for an accounting period that begins on or after 1 January 2018.

The following new standards and interpretations that have been issued are obligatory for annual reporting periods beginning on or after 1 January 2018 and that have not been applied by the Group ahead of their effective dates.

The Group first applied IFRS 9 and IFRS 15 from 1 January 2018. Several other standards are effective from 1 January 2018, but they do not have a significant impact on the Group's financial statements.

Since the Group opted for transitional methods for the application of new standards, the comparative information in these financial statements has not been restated to reflect the requirements of the new standards.

IFRS 9 – Financial Instruments
(issued in July 2014 and effective for annual periods beginning on or after 1 January 2018)

Impact of the initial application of IFRS 9
Financial Instruments
In the current year, the Group has applied IFRS 9 Financial Instruments (as revised in July 2014) and the related consequential amendments to other IFRS Standards that are effective for annual periods beginning on or after 1 January 2018.

Additionally, the Group adopted consequential amendments to IFRS 7 *Financial Instruments: Disclosures* that were applied to the disclosures for 2018 and to the comparative period.

IFRS 9 introduced new requirements for:

1) The classification and measurement of financial assets and financial liabilities,

2) Impairment of financial assets, and

3) General hedge accounting.

Details of these new requirements as well as their impact on the Group's separate financial statements are described below.

The Group has applied IFRS 9 in accordance with the transitional provisions set out in IFRS 9.

– For the purposes of measurement, financial assets are classified into three categories:
  - Assets measured at amortised cost (AC);
  - Assets measured at fair value through other comprehensive income (FVTOCI); and
  - Assets measured at fair value through profit or loss (FVTPL).

– The classification of financial assets is based on the business model for financial asset management, and whether the contractual cash flows represent solely payments of principal and interest (SPPI). If a debt instrument is held within the business model, whose objective is to collect contractual cash flows until maturity of an instrument, it is measured at amortised cost provided that it meets the SPPI requirement. Financial assets meeting the SPPI requirement and held within the business model whose objective is to both, collect contractual cash flow and sell the asset, it is classified as FVTOCI. Financial assets whose cash flows do not meet the SPPI requirement must be measured at FVTPL (such as derivatives). Embedded derivatives are no longer separated from financial assets but they are included in the assessment of the SPPI criteria.

– The objective of the Group's business model is to hold the financial assets to collect the contractual cash flows (rather than to sell the instrument prior to its contractual maturity to realise its fair value changes).

– IFRS 9 replaces previous categories of IAS 39 – held to maturity, loans and receivables and financial assets available for sale. Pursuant to IFRS 9, derivatives regulated by contracts related to financial assets in the scope of the standard are never separated. A hybrid financial instrument is then classified as a whole.

– Equity instruments are always measured at fair value. However, the management of the Group may make an irrevocable decision (upon initial recognition or upon transition to IFRS 9) to report changes in fair value in other comprehensive income, provided that the instrument is not held for trading. If the investment instrument is intended for trading, changes in fair value are presented in the profit and loss account.

– The majority of IAS 39 requirements for the classification and measurement of financial liabilities were transferred to IFRS 9 without change. The main change will be the Group's obligation to report the impact of changes in the credit risk of financial liabilities measured at fair value, whose change is reported in profit and loss or in other comprehensive income.

– Based on the adoption of IFRS 9, the Group adopted changes concerning the presentation of the financial statements (IAS 1) that require reporting expected credit losses of financial assets on a separate line in profit and loss and other comprehensive income. The Group's previous approach was to include impairment of trade receivables in other expenses.

– As a result, the Group reclassified impairment losses of CZK 0 million as at 31 December 2017. The Group decided not to restate the comparative period.

– Given the nature of the Group's activities, the Transmission Code, the system of issuing and paying advances and the subsequent recognition the application of IFRS 9 does not affect the Group's financial statements. New IFRS 9 classification of financial assets is disclosed in the notes.

– The Group also adopted subsequent changes to IFRS 7 – Financial Instruments. It concerns the method of disclosure applied for 2018.

– IFRS 9 contains a new model of recognising impairment losses – the expected credit loss model (ECL). A three-level approach is available, based on the change in credit quality of financial assets since initial recognition. In practice, the new rules mean that upon the first recognition of financial assets whose value is not credit-impaired (or the expected credit losses during the life of trade receivables without a significant financing component pursuant to IFRS 15; receivables with a significant financing component are subject to the selection of accounting policies – either the simplified or the full method), entities are obliged to recognise the immediate loss in the amount of the 12-month expected credit loss. Where there has been a significant increase in credit risk or a decrease in the value of the financial asset, impairment is measured using lifetime expected credit losses of trade receivables, rather than 12-month expected credit losses. The model includes an operating expedient for leases and trade receivables.

– IFRS 9 gives the option to choose: entities may continue applying hedge accounting requirements pursuant to IAS 39 (refer to Note 6.8A), until the macro hedging project is completed, or they can apply IFRS 9. The Group decided to continue using IAS 39 in the area of hedge accounting for the reporting period beginning on 1 January 2018 and 1 January 2019. The Group is considering transitioning to IFRS 9 in the future.

– The following table and the below notes explain the original measurement categories pursuant to IAS 39 and the new measurement categories pursuant to IFRS 9 for each group of financial assets and financial liabilities of the Group as at 1 January 2018:

	Balance at Jan 2018	
	Measurement as per IAS 39	**Measurement as per IFRS 9**
Trade and other receivables	324	324
Borrowings to related parties	5	5
Other financial assets	683	683
Cash and cash equivalents	631	631
Other non-current payables	13	13
Non-current loans and borrowings	26,988	26,988
Non-current financial derivatives	835	835
Current loans and borrowings	299	299
Current trade and other payables	517	517
Short-term financial derivatives	209	209

– Given the nature of the Group's activities and the types of financial instruments it holds, the application of IFRS 9 does not affect the Group's financial statements. New IFRS 9 classification of financial assets is disclosed.

– The Group performed an analysis of the impact of the new model of recognising expected credit losses upon the application of IFRS 9 on the financial statements as at 1 January 2018 which was deemed immaterial and therefore not accounted for.

IFRS 15 – Revenue from Contracts with Customers (issued on 28 May 2014 and effective for reporting periods beginning on or after 1 January 2018)

In the current year, the Group has applied IFRS 15 Revenue from Contracts with Customers (as amended in April 2016) which is effective for an annual period that begins on or after 1 January 2018. IFRS 15 introduced a 5-step approach to revenue recognition. Far more prescriptive guidance has been added in IFRS 15 to deal with specific scenarios.

This new standard introduces the principle that revenue is to be recognised at transaction price at the time when control over the goods or services are transferred to the customer. Any tied products or services that are distinct represent separate performance obligations and revenues for those have to be recognised separately. Discounts or returns on the selling price have to be allocated to the individual performance obligations. If the price is variable for any reason the amount of variable consideration is estimated only to the extent that it is highly probable that a significant reversal in the amount of cumulative revenue recognised will not occur when the uncertainty associated with the variable consideration is subsequently resolved.

Aside from more extensive disclosures of revenue transactions, the application of IFRS 15 does not have a significant impact on the financial situation and/or financial performance of the Group.

Amendment to IFRS 15 – Revenue from Contracts with Customers (issued in April 2016 and effective for reporting periods beginning on or after 1 January 2018)

The amendment does not change the basic principles of the standard, it only clarifies how to identify the performance obligation defined in the contract (promise to supply goods or a service to the customer); how to determine whether the Group acts in the relation as a supplier of goods or services (principal), or only as an intermediary (agent responsible only for mediating the supply of goods or services); and how to determine whether the income from the licence sold should be reported once or accrued over a period of time. The amendment also contains two mitigations to decrease costs in the case of the first application of the new standard. The application of new standards and interpretations effective on or after 1 January 2018.

Aside from more extensive disclosures of revenue transactions, the application of IFRS 15 does not have a significant impact on the financial situation and/or financial performance of the Group.

The following amendments to IFRSs and interpretations issued by the IASB and adopted by the EU, effective for annual periods beginning or on after 1 January 2018, are also effective for the first time in the current period:

- Amendments to IFRS 2 Classification and Measurement of Share-based Payment Transactions
- Amendments to IAS 40 Transfers of Investment Property
- Amendments to IAS 28 Investments in Associates and Joint Ventures (part of Annual Improvements to IFRSs – cycle 2014–2016)
- IFRIC 22 Foreign Currency Transactions and Advance Consideration

The adoption of these amendments does not have a significant impact on disclosures or the amounts reported in these financial statements.

b) New standards and interpretations effective for reporting periods beginning on or after 1 January 2019

At the date of authorisation of these financial statements, the Group has not applied the following new and revised IFRSs and a new Interpretation that have been issued and adopted by the EU but are not yet effective in the EU:

IFRS 16	*Leases*
Amendments to IFRS 9	*Prepayment Features with Negative Compensation*
IFRIC 23	*Uncertainty over Income Tax Treatments*
Amendments to IAS 28	*Investments in Associates and Joint Ventures – Long-term Interests in Associates and Joint Ventures*

The Group does not expect that the adoption of the new Standards, amendments to the existing Standards and a new Interpretation listed above will have a material impact on the financial statements of the Group in future periods, except as noted below:

IFRS 16 – Leases (issued in January 2016 and effective for reporting periods beginning on or after 1 January 2019).

This new standard determines new principles for reporting, measurement, presentation and disclosure of leases. IFRS 16 eliminates the classification of operating and finance leases as defined in IAS 17 and instead it provides a comprehensive accounting model for the lessee. Lessees will be required to report: (a) assets and liabilities for all leases longer than 12 months unless the assets are of low value, and (b) depreciation of leased assets separately from interest on lease liabilities in profit and loss. From the perspective of the lessor, IFRS 16 takes over most of the principles of the current standard, IAS 17. The lessor continues to classify operating and finance leases and to recognise these two types of lease separately. The date of first application of IFRS 16 for the Group will be 1 January 2019.

The Group has chosen the full retrospective application of IFRS 16 in accordance with IFRS 16:C5(a). Consequently, the Group will restate the comparative information.

Impact of the new definition of a lease:

- The Group will make use of the practical expedient available on transition to IFRS 16 not to reassess whether a contract is or contains a lease. Accordingly, the definition of a lease in accordance with IAS 17 and IFRIC 4 will continue to apply to those leases entered or modified before 1 January 2019.

- The change in definition of a lease mainly relates to the concept of control. IFRS 16 distinguishes between leases and service contracts on the basis of whether the use of an identified asset is controlled by the customer. Control is considered to exist if the customer has the right to obtain substantially all of the economic benefits from the use of an identified asset and the right to direct the use of that asset. The new definition in IFRS 16 will not significantly impact the scope of contracts that meet the definition of a lease for the Group.

Impact on Lessee Accounting:

Operating leases

IFRS 16 will change how the Group accounts for leases previously classified as operating leases under IAS 17, which were off-balance sheet.

On initial application of IFRS 16, for all leases (except as noted below), the Group will:

a) Recognise right-of-use assets and lease liabilities in the statement of financial position, measured at the present value of the future lease payments;

b) Recognise depreciation of right-of-use assets and interest on lease liabilities in the statement of profit or loss; and

c) Separate the total amount of cash paid into a principal portion (presented within financing activities) and interest (presented within operating activities) in the cash flow statement.

Under IFRS 16, right-of-use assets will be tested for impairment in accordance with IAS 36 Impairment of Assets. This will replace the previous requirement to recognise a provision for onerous lease contracts.

For short-term leases (lease term of 12 months or less) and leases of low-value assets (such as personal computers and office furniture), the Group will opt to recognise a lease expense on a straight-line basis as permitted by IFRS 16.

As at 31 December 2018, the Group has non-cancellable operating lease commitments of CZK 75 million (refer to Note 30).

As at 1 January 2019, the liability reported under IFRS 16 amounts to CZK 294 million (net) and the asset to CZK 246 million.

The lessee elected to apply this Standard in accordance with paragraph C5(b) – the lessee has recognised a right-of-use asset at the date of initial application for leases previously classified as an operating lease applying IAS 17. The lessee has chosen, on a lease-by-lease basis, to measure that right-of-use asset at its carrying amount as if the Standard had been applied since the commencement date, but discounted using the lessee's incremental borrowing rate at the date of initial application.

The Group has applied a modified retrospective method using a single discount rate (2.5%) to a portfolio of leases (leased company cars) and a single discount rate for leased buildings and parking (3.72%) which were assessed as leases with reasonably similar characteristics (similar remaining lease term for a similar class of underlying asset in a similar economic environment) and therefore fulfilled the criteria of IFRS 16.C10(a).

The Group will apply the modified retrospective approach and as a lessee it will not restate comparative figures. The Group will recognise the cumulative effect of initially applying IFRS 16 as an adjustment to the opening balance of retained earnings at the date of initial application (1 January 2019).

Impact on Lessor Accounting:

The Group does not assume the role of a lessor; therefore, no impact on lessor accounting is presented in these financial statements.

c) New Standards and amendments to the existing Standards issued by IASB but not yet adopted by the EU

The following standards, amendments to the existing standards and new interpretations have yet to be adopted for application in the EU:

IFRS 14 – Regulatory Deferral Accounts	The European Commission has decided not to launch the endorsement process of this interim standard and to wait for the final standard.
IFRS 17 – Insurance Contracts	Effective for annual periods beginning or after 1 January 2021.
Amendments to IFRS 3 Business Combinations – Definition of a Business	Effective for annual periods beginning or after 1 January 2020.
Amendments to IFRS 10 Consolidated Financial Statements and IAS 28 Investments in Associates and Joint Ventures – Sales or Contributions of Assets between an Investor and its Associate/Joint Venture	Postponed: awaiting IASB developments.
Amendments to IAS 1 Presentation of Financial Statements and IAS 8 Accounting Policies, Changes in Accounting Estimates and Errors – Definition of Materiality	Effective for annual periods beginning or after 1 January 2020.
Amendments to IAS 19 Employee Benefits – Plan Amendment, Curtailment or Settlement	Effective for annual periods beginning or after 1 January 2019.
Annual improvements to IFRS – Cycle 2015–2017 – Amendments to IFRS 3 Business Combination, IFRS 11 Joint Arrangements, IAS 12 Income Taxes and IAS 23 Borrowing Costs	Effective for annual periods beginning or after 1 January 2019.
Update of references to the Conceptual Framework of IFRS	Effective for annual periods beginning or after 1 January 2020.

The Group's management anticipates that the adoption of these new standards and amendments to the existing standards will have no material impact on the financial statements of the Group in the future reporting periods.

6. Segment Information

(a) Description of products and services from which each reportable segment derives its revenue

The Group is organised on the basis of one main business segment – Natural gas transmission (representing natural gas transmission services).

Revenues from core activities comprise revenues from international transit, domestic transmission and other. In 2018, revenues from international transit represented 83%, revenues from domestic transmission 16% and other revenues 1% of the Group's revenues from core activities.

(b) Factors that management used to identify the reportable segments

Refer to the information in Note 4.

(c) Information about reportable segment profit or loss, assets and liabilities

The whole Group is considered as one reportable segment. Segment information for the reportable segment for the years ended 31 December 2018 and 31 December 2017 is set out below:

In millions of Czech Crowns	Natural gas transmission	Natural gas transmission
	2018	2017
Revenues	7,335	7,397
Other operating income	44	39
Finance income	53	4
Total segment income	**7,432**	**7,440**
Materials consumed	97	302
Employee benefits	458	440
Depreciation and amortisation	1,891	2,013
Services purchased and lease charges	432	307
Changes in fair value of derivatives, net	(40)	37
Foreign exchange differences, net	(30)	100
Other operating expenses	36	41
Income tax expense	697	619
Finance costs	957	947
Losses related to the sale of property, plant and equipment	1	–
Segment profit for the year	**2,933**	**2,634**
Segment other comprehensive income for the year	**(414)**	**2,278**
Segment total comprehensive income for the year	**2,519**	**4,912**
Capital expenditure – additions at cost (Note 8, 9)	**1,439**	**771**

In millions of Czech Crowns	Natural gas transmission	Natural gas transmission
	31 December 2018	31 December 2017
Total reportable segment Assets	**47,971**	**45,234**
Total reportable segment Liabilities	**36,537**	**36,004**

Capital expenditure represents additions to non-current assets other than financial instruments and deferred tax assets.

(d) Geographical information

Total revenues for geographical areas for which the revenues are material are reported separately and disclosed below.

The analysis is based on the registered office of shippers (users of the transmission system that is operated by the Group in the Czech Republic).

In millions of Czech Crowns	2018	2017
Czech Republic	1,130	1,566
Other EU countries	1,547	1,297
Non-EU countries	4,658	4,534
Total consolidated revenues from core activities	**7,335**	**7,397**

Capital expenditure for each individual country is reported separately as follows:

In millions of Czech Crowns	2018	2017
Czech Republic	1,439	771
Total consolidated capital expenditure – additions at cost (Note 8, 9)	**1,439**	**771**

The analysis is based on location of assets. Capital expenditure represents additions to non-current assets other than financial instruments and deferred tax assets.

(e) Major customers

Revenues from customers which represent 10% or more of the total revenues are as follows:

In millions of Czech Crowns	2018	2017
Customer 1	5,449	4,885
Customer 2	823	1,117
Total revenues from major customers	**6,272**	**6,002**

Revenues comprise only revenues from core activities.

Entities known to the Group as being under common control are considered as a single customer.

7. Balances and Transactions with Related Parties

Parties are generally considered to be related if the parties are under common control or if one party has the ability to control the other party or can exercise significant influence or joint control over the other party in making financial and operational decisions. In considering each possible related party relationship, attention is directed to the substance of the relationship, not merely the legal form.

The Group is fully owned by NET4GAS Holdings and NET4GAS Holdings is the ultimate parent company of the group.

The Group's balances and transactions with subsidiaries of the ultimate parent of Allianz Infrastructure Czech HoldCo II S.à r.l. and subsidiaries of the ultimate parent of Borealis Novus Parent B.V. are disclosed below within the category Subsidiaries of joint ventures' ultimate parents.

At 31 December 2018, the outstanding balances with related parties were as follows:

In millions of Czech Crowns	Subsidiaries of joint venturers' ultimate parents	Immediate parent
Loans to related parties (Note 12)		
NET4GAS Holdings, s.r.o.	–	8
Borrowings (Note 17)		
NET4GAS Holdings, s.r.o.	–	19

The income and expense items with related parties for the year ended 31 December 2018 were as follows:

In millions of Czech Crowns	Subsidiaries of joint venturers' ultimate parents	Immediate parent
Other revenues		
NET4GAS Holdings, s.r.o. – services	–	1

At 31 December 2017, the outstanding balances with related parties were as follows:

In millions of Czech Crowns	Subsidiaries of joint venturers' ultimate parents	Immediate parent
Loans to related parties (Note 12)		
NET4GAS Holdings, s.r.o.	–	5
Borrowings (Note 17)		
NET4GAS Holdings, s.r.o.	–	22

The income and expense items with related parties for the year ended 31 December 2017 were as follows:

In millions of Czech Crowns	Subsidiaries of joint venturers' ultimate parents	Immediate parent
Other revenues		
NET4GAS Holdings, s.r.o. – interest income	–	2
NET4GAS Holdings, s.r.o. – services	–	1

At 31 December 2018 and 2017 the Group did not have any other rights and obligations connected to related parties.

Key management compensation is presented below:

	2018		2017	
In millions of Czech Crowns	Expense	Accrued liability	Expense	Accrued liability
Short-term benefits:				
– Salaries	59	4	57	4
– Short-term bonuses	15	15	15	14
Other long-term employee benefits:				
– Long-term bonus scheme	11	35	16	36
– Defined contribution benefits	6	3	5	3
Total	**91**	**57**	**93**	**57**

Short-term bonuses fall due in full within twelve months after the end of the period in which management rendered the related services.

Key management represents Statutory Directors and managers directly reporting to them.

8. Property, Plant and Equipment

Movements in the carrying amount of property, plant and equipment were as follows:

In millions of Czech Crowns	Freehold Land	Buildings and constructions	Plant and equipment	Construction in progress	Total
Carrying amount at 1 January 2017	**185**	**42,626**	**1,096**	**476**	**44,383**
Additions	–	–	–	732	732
Capitalised borrowing costs	–	–	–	9	9
Transfers	1	279	246	(526)	–
Disposals	–	(2)	(3)	–	(5)
Depreciation charge	–	(1,744)	(228)	–	(1,972)
Carrying amount at 31 December 2017	**186**	**41,159**	**1,111**	**691**	**43,147**
Cost at 31 December 2017	186	62,036	5,951	691	68,864
Accumulated depreciation at 31 December 2017	–	(20,877)	(4,840)	–	(25,717)
Additions at cost:					
Additions	–	–	–	1,400	1,400
Capitalised borrowing costs	–	–	–	11	11
Transfers	64	261	52	(377)	–
Disposals at cost	(1)	–	(8)	–	(9)
Depreciation:					
Accumulated depreciation on disposals	–	–	8	–	8
Depreciation charge	–	(1,652)	(201)	–	(1,853)
Carrying amount at 31 December 2018	**249**	**39,768**	**962**	**1,725**	**42,704**
Cost at 31 December 2018	249	62,297	5,995	1,725	70,266
Accumulated depreciation at 31 December 2018	–	(22,529)	(5,033)	–	(27,562)

The capitalisation rate used to determine the amount of borrowing costs to be capitalised is the weighted interest rate applicable to the entity's general borrowings during the year, was 3,05% in 2018 (2017: 3,09%).

In 2018 the Group acquired tangible assets in the total amount of CZK 1,411 million (2017: CZK 741 million). The most significant investment was within the Capacity4Gas project, a total of CZK 997 million (2017: CZK 189 million).

As at 31 December 2018, construction in progress consists mainly of construction of the Capacity4Gas project of CZK 1,343 million and construction of Czech-Polish interconnector gas pipeline of CZK 336 million. Upon completion, the assets are expected to be transferred to buildings and constructions. Other items represent several smaller projects.

9. Intangible Assets

In millions of Czech Crowns	Software	Development costs	Other intangible assets	Assets under construction	Total
Carrying amount at 1 January 2017	**55**	**2**	**11**	**21**	**89**
Additions	–	–	–	30	30
Transfers	38	–	2	(40)	–
Amortisation charge	(36)	(2)	(3)	–	(41)
Carrying amount at 31 December 2017	**57**	**–**	**10**	**11**	**78**
Cost at 31 December 2017	496	54	27	11	588
Accumulated amortisation at 31 December 2017	(439)	(54)	(17)	–	(510)
Additions at cost:					
Additions	–	–	–	28	28
Transfers	14	–	–	(14)	–
Disposals at cost	(19)	–	–	–	(19)
Amortisation:					
Accumulated amortisation on disposals	19	–	–	–	19
Amortisation charge	(34)	–	(4)	–	(38)
Carrying amount at 31 December 2018	**37**	**–**	**6**	**25**	**68**
Cost at 31 December 2018	491	54	27	25	597
Accumulated amortisation at 31 December 2018	(454)	(54)	(21)	–	(529)

The Group invested (additions of intangible fixed assets – at cost) a total of CZK 28 million in intangible assets in 2018 (2017: CZK 30 million).

10. Other Non-Current Assets

In millions of Czech Crowns	31 December 2018	31 December 2017
Advances for acquisition of fixed assets	220	25
Total other non-current assets	**220**	**25**

11. Inventories

In millions of Czech Crowns	31 December 2018	31 December 2017
Material	65	61
Total inventories	**65**	**61**

Material represents mainly spare parts for the gas transmission system.

There are no inventories valued at net realisable value as at 31 December 2018 and 2017.

12. Loans to Related Parties

In millions of Czech Crowns	31 December 2018	31 December 2017
Financial assets measured at amortised cost:		
Corporate loans		
– denominated in Czech Crowns	1	–
– denominated in Euros	7	5
Total loans provided	**8**	**5**

Loans to related parties as at 31 December 2018 are provided on the basis of the Loan agreement dated 11 November 2013 and are of short-term nature.

Analysis by credit quality of loans outstanding is as follows:

In millions of Czech Crowns	31 December 2018 Corporate loans	31 December 2017 Corporate loans
Neither past due nor impaired		
– NET4GAS Holdings, s.r.o. – parent company (without external rating)	8	5
Total neither past due nor impaired	**8**	**5**
Total loans provided	**8**	**5**

There is no collaterals attached to the loans presented above.

Refer to Note 31 for the estimated fair value of each class of loans. Interest rate analysis of loans is disclosed in Note 29. Information on related party transactions is disclosed in Note 7.

13. Trade and Other Receivables

In millions of Czech Crowns	31 December 2018	31 December 2017
Trade and estimated receivables	702	325
Less impairment loss provision	(1)	(1)
Total current trade and other receivables	**701**	**324**

Analysis by credit quality of trade and other receivables is as follows:

In millions of Czech Crowns	31 December 2018 Trade and estimated receivables	31 December 2017 Trade and estimated receivables
Neither past due nor impaired – exposure to		
– Between A- and BBB-*	348	167
– Not rated	114	21
Total neither past due nor impaired	462	188
Past due but not impaired		
– less than 30 days overdue	12	16
– between 30 – 60 days overdue	9	9
– 60 days or more overdue	218	111
Total past due but not impaired**	239	136
Individually determined to be impaired (gross)		
– 360 days or more overdue	1	1
Total individually impaired	1	1
Less impairment provision	(1)	(1)
Total trade and other receivables	**701**	**324**

* Rating disclosed is based on the equivalent credit rating from the third party rating agencies defined in the Network Code approved by the Energy Regulation Office (ERO) which is applicable for the Group.

** Most past due receivables are receivables from one debtor (CZK 235 million) with whom the arbitration procedure is pending. The Group believes that the receivable will be fully paid (Note 4).

14. Other Non-Financial Assets and Other Financial Assets

In millions of Czech Crowns	31 December 2018	31 December 2017
Value-added tax prepaid	13	–
Prepayments for services	33	32
Accrued revenues	2	–
Total current non-financial assets	**48**	**32**

Other Financial Assets including credit quality are the following:

In millions of Czech Crowns	31 December 2018	31 December 2017
Financial assets measured at amortised cost:		
Deposit bills of exchange with original maturity of less than three months* (A+ to A- rated)	–	300
Deposit bills of exchange with original maturity of less than six months* (A+ to A- rated)	2,787	383
Total other financial assets	**2,787**	**683**

* One month is considered to be equal to 30 days.

15. Cash and Cash Equivalents

In millions of Czech Crowns	31 December 2018	31 December 2017
Bank balances available on demand	1,302	631
Total cash and cash equivalents	**1,302**	**631**

The credit quality of cash and cash equivalents balances may be summarised as follows:

In millions of Czech Crowns	31 December 2018	31 December 2017
Neither past due nor impaired		
– A+ to A- rated	1,191	366
– BBB+ to BBB- rated	111	265
Total	**1,302**	**631**

16. Equity

The Company is a limited liability company. It has no issued share securities. The rights attributed to share in the equity correspond to the proportion in the ownership interest.

Dividends declared and paid during the year were as follows:

In millions of Czech Crowns	2018	2017
Dividends payable at 1 January	–	–
Dividends approved and paid during the year	–	21
Dividends payable at 31 December	–	–

Advance dividends paid during the year were as follows:

In millions of Czech Crowns	2018	2017
Advance dividends paid	1,500	–
Total advance dividends paid	**1,500**	**–**

All dividends were approved in Czech Crowns and paid in a different currency mix (CZK, EUR and USD).

A description of the nature and purpose of each reserve is provided below the table.

In millions of Czech Crowns	Capital contributions outside registered capital	Cash flow hedges	Total other reserves
Balance as at 1 January 2017	**6,631**	**(1,813)**	**4,818**
Revaluation – hedge accounting	–	2,574	2,574
Reclassification to profit or loss (Revenues) – gross	–	228	228
Reclassification to profit or loss (Finance costs) – gross	–	11	11
Deferred tax effect	–	(535)	(535)
Contribution outside registered capital	(3,267)	–	(3,267)
Balance as at 31 December 2017	**3,364**	**465**	**3,829**
Revaluation – hedge accounting	–	(583)	(583)
Reclassification to profit or loss (Revenues) – gross	–	65	65
Reclassification to profit or loss (Finance costs) – gross	–	6	6
Deferred tax effect	–	98	98
Contribution outside registered capital	1,185	–	1,185
Balance as at 31 December 2018	**4,549**	**51**	**4,600**

Capital contributions outside registered capital
Capital contributions outside registered capital comprises of cash and non-cash capital contributions that does not give rise to the registered capital.

Increase / decrease in Capital contributions outside registered capital:

Month/Year	In millions of Czech Crowns	Comment to the settlement of the increase/decrease
June 2017	(622)	Netted against receivable from loans incl. interest to NET4GAS Holdings (cash-pooling)
June 2017	(3,000)	Cash payment
November 2017	355	Cash received*
Total increase in 2017	**(3,267)**	
August 2018	547	Cash received*
November 2018	638	Cash received*
Total increase in 2018	**1,185**	

* For purpose of Capacity4Gas project a Funding agreement was concluded based on which the sole shareholder increased other capital funds.

Cash flow hedges
Cash flow hedges are used to recognise gains or losses on hedging instruments that are designated and qualify as cash flow hedges in other comprehensive income, as described in Notes 3d and 29. Amounts are reclassified to profit or loss (line 'Financial expenses'/'Financial income') when the associated hedged transaction affects profit or loss.

17. Borrowings

In millions of Czech Crowns	31 December 2018	31 December 2017
Short-term borrowings from related parties (cash pooling NET4GAS Holdings)	19	22
Current portion of bonds and bank borrowings		
– CZK denominated bank borrowings (repayable on 30 May 2022)	25	12
– CZK denominated bond (repayable on 28 January 2021)	80	129
– EUR denominated bond (repayable on 28 July 2021)	66	66
– CZK denominated bond (repayable on 17 July 2025)	30	–
– EUR denominated bond (repayable on 28 July 2026) – issued in 2014	57	56
– EUR denominated bond (repayable on 28 July 2026) – issued in 2015	14	14
Non-current bonds and bank borrowings		
– CZK denominated bank borrowings (repayable on 30 May 2022)	7,065	7,061
– CZK denominated bond (repayable on 28 January 2021)	4,344	6,968
– EUR denominated bond (repayable on 28 July 2021)	7,696	7,627
– CZK denominated bond (repayable on 17 July 2025)	2,627	–
– EUR denominated bond (repayable on 28 July 2026) – issued in 2014	4,092	4,060
– EUR denominated bond (repayable on 28 July 2026) – issued in 2015	1,282	1,272
Total borrowings – current	**291**	**299**
Total borrowings – non-current	**27,106**	**26,988**
Total borrowings	**27,397**	**27,287**

Bank borrowings and bonds
The Group borrowings as at 31 December 2018 include bank borrowings acquired in 2017 and bonds issued in 2014, 2015 and 2018.

In July 2018 some of the CZK bonds due in 2021 were redeemed prematurely and new CZK bonds due in 2025 were issued.

The Group acquired a committed revolving facility agreement in the equivalent of EUR 80 million (CZK 2,058 million per the Czech National Bank's foreign exchange rate as at 31 December 2018). Further, the Group acquired the Overdraft facility in the equivalent of EUR 20 million (CZK 514,5 million per the Czech National Bank's foreign exchange rate as at 31 December 2018). Both facility agreements might be utilised in CZK or EUR. During 2018 the Overdraft facility was drawn and as at 31 December 2018 it was repaid. The Revolving facility agreement was undrawn during 2018 (as at 31 December 2017 the Revolving facility and Overdraft facility were undrawn).

Six banks with different shares participated in the total bank borrowings as at 31 December 2018 (six banks as at 31 December 2017).

There is no collateral related to the above mentioned bank borrowings or bonds.

Group's senior debts are all issued at pari-passu. The borrowings have no quantitative financial covenants. There are several qualitative covenants applied, i.e. negative pledge, change of control put and loss of finance put. Violation of these covenants can lead to immediate maturity of the debt.

The Group's right to lien its property in favour of another creditor is restricted due to conditions stated in bank and bond financing contracts.

Bank borrowings and bonds denominated in foreign currencies represent a constituent of hedge accounting, which represents the hedging instrument for securing of foreign exchange risk associated with future cash flows resulting from natural gas transmission revenues (cash flow hedge – Notes 3d and 29).

In May 2017 the USD bank borrowing was repaid (was replaced by a new CZK bank borrowing). The cumulative loss in equity (hedge accounting) remained in equity and will be recognised gradually in finance costs (based on effectivity test made at the date of redemption, till March 2030).

Bonds issued:

				In millions of Czech Crowns	
	Issue nominal value	**Due date**	**Annual coupon repayment due date**	**31 December 2018**	**31 December 2017**
Bond EUR, serial no. 1, ISIN XS1090450047	300,000,000 EUR	28 Jul 2021	Each 28 Jul in arrears	7,762	7,693
Bond EUR, serial no. 2, ISIN XS1090449627	160,000,000 EUR	28 Jul 2026	Each 28 Jul in arrears	4,149	4,116
Bond CZK, serial no. 3, ISIN XS1090620730	7,000,000,000 CZK 4,354,300,000 CZK*	28 Jan 2021	Each 28 Jan in arrears	– 4,424	7,097 –
Bond EUR, serial no. 4, ISIN XS1172113638	50,000,000 EUR	28 Jul 2026	Each 28. Jul in arrears	1,296	1,286
Bond CZK, Domestic, ISIN CZ0003519472	2,643,000,000 CZK	17 Jul 2015	Each 17 Jul in arrears	2,657	–
Total bonds				**20,288**	**20,192**

* As at 17 July 2018 some of the CZK bonds in the amount of CZK 2,645,700,000 were repaid prematurely and therefore the original nominal value of CZK 7,000,000,000 was reduced to CZK 4,354,300,000.

Coupon rates to the above mentioned bonds are in the range of 2.25% – 3.5% p.a. The terms of issue of all the above stated bonds have been approved by the decision of the Central Bank of Ireland (serial no. 1–4) or the Czech National Bank (domestic bond).

The bonds with serial n. 1–3 were accepted for trading on a regulated market of the Irish Stock Exchange PLC on 28 July 2014. The 2015 bonds, serial n. 4, was issued via private placement. Domestic "CZ" bond was accepted for trading on a regulated market of the Prague Stock Exchange on 17 July 2018.

The fair value of borrowings is disclosed in Note 31.

18. Government and Other Grants

The Group obtained grants from the European Commission for construction projects and deducted the grant value from the carrying amount of the related property, plant and equipment when all conditions attached to the grant were fulfilled.

In millions of Czech Crowns	**31 December 2018**	**31 December 2017**
Grants	10	7

In 2018 the Group complied with all attached conditions and therefore received a grant of CZK 2.7 million for the Czech-Polish interconnector gas pipeline project.

19. Other Taxes Payable

In millions of Czech Crowns	**31 December 2018**	**31 December 2017**
Other taxes payable within one year comprise:		
Property and other taxes	5	6
Social and health insurance	13	12
Other taxes payable – current	**18**	**18**

20. Provisions for Liabilities and Charges

Movements in provisions are as follows:

	2018		**2017**	
In millions of Czech Crowns	**Current**	**Non-current**	**Current**	**Non-current**
Carrying amount at January 1	**2**	**–**	**–**	**167**
Additions charged to profit or loss	–	–	2	–
Unused amounts reversed	(2)	–	–	(167)
Amounts used during the year	–	–	–	–
Carrying amount at December 31	**–**	**–**	**2**	**–**

The non-current provisions as at 31 December 2017 were primarily set aside for restructuring on selected compressor stations (expected to be utilised in 2021).

New cross-border capacity was offered and successfully marketed at the annual capacity auction on 6 March 2017 – a result of the joint efforts between the transmission operators in the Federal Republic of Germany and the Slovak Republic and NET4GAS. Based on the results of this auction, the Group is ready to invest in the relevant new gas infrastructure in the Czech Republic in the upcoming years. In connection with this construction, the Group decided to continue the operation of these compressor stations, reassessed their useful lives and released the provision for liquidation and the provision for restructuring – termination payments to employees.

The current provision set aside in 2017 was reassessed and due to the transfer of employees to the new infrastructure project, it was dissolved.

21. Trade and Other Payables

In millions of Czech Crowns	31 December 2018	31 December 2017
Trade payables for purchased property, plant and equipment	170	150
Trade payables – other	22	98
Accrued liabilities for purchased property, plant and equipment	262	53
Accrued liabilities – other	167	68
Received deposits from customers	81	147
Other financial liabilities	1	1
Total financial payables within trade and other payables – current	**703**	**517**
Other payables	10	13
Total financial payables within other payables – non-current	**10**	**13**

22. Accrued Employees Benefits and Other Non-Financial Liabilities

In millions of Czech Crowns	31 December 2018	31 December 2017
Employee benefits		
– Salaries and bonuses	25	25
– Defined contribution costs	56	44
– Untaken holiday costs	11	12
Prepayments received	131	132
Other non-financial liabilities	10	13
Total employee benefits and other non-financial liabilities – current	**233**	**226**

In millions of Czech Crowns	31 December 2018	31 December 2017
Employee benefits – other long-term benefits	105	101
Grant prepayments received (Note 18)	10	7
Total employee benefits and other non-financial liabilities – non-current	**115**	**108**

23. Expenses

In millions of Czech Crowns	2018	2017
Raw materials consumed*	97	302
Salaries	*284*	*297*
Statutory and private pension contribution	*174*	*143*
Employee benefits	458	440
Depreciation and amortisation	1,891	2,013
Repairs and maintenance services	*120*	*140*
IT & Telecommunications expenses	*89*	*95*
Consultancy and advisory services	*63*	*61*
Lease charges	*65*	*64*
Marketing	*22*	*20*
Other services	*73*	*(73)*
Services purchased and lease charges	432	307
Losses / (gains) on derivative financial instruments	(40)	37
Foreign exchange differences, net	(30)	100
Other expenses	36	41
Total operating expenses	**2,844**	**3,240**

* Represents mainly consumption of natural gas.

24. Finance Income

In millions of Czech Crowns	2018	2017
Financial instruments measured at amortised cost:		
■ Interest income on other financial assets	7	3
■ Debt securities – not part of hedging relationship	46	–
Financial instruments measured at FVTPL:		
■ Other finance income	–	1
Total finance income recognised in profit or loss	**53**	**4**

25. Finance Costs

In millions of Czech Crowns	2018	2017
Financial instruments measured at amortised cost:		
■ Interest expense – other	630	621
Financial instruments measured at FVTPL:		
■ Finance costs – release of hedge reserve reported in equity*	6	4
■ Net foreign exchange differences on financing activities	234	253
■ Other finance costs	87	69
Total finance costs recognised in profit or loss	**957**	**947**

* In May 2017, a USD bank loan was repaid, the accumulated loss reported in equity (hedge accounting) remained in equity and it will be gradually charged to finance costs (based on the effectiveness tests performed as at the date of repayment, until March 2030).

26. Income Taxes

(a) Components of income tax expense

Income tax expense / (credit) recorded in profit or loss comprises the following:

In millions of Czech Crowns	2018	2017
Adjustment in respect of current income tax from prior year	4	–
Current income tax expense	812	695
Deferred income tax expense / (credit)	(119)	(76)
Income tax expense for the year in statement of profit or loss	**697**	**619**

(b) Reconciliation between the tax expense and profit or loss multiplied by applicable tax rate

The income tax rate applicable to the majority of the Group's 2018 and 2017 income is 19%. The reconciliation between the expected and the actual tax charge is provided below.

In millions of Czech Crowns	2018	2017
Profit before tax	**3,630**	**3,253**
Theoretical tax charge at statutory rate of 19%:	690	618
Tax effect of items which are not deductible or assessable for income tax purposes:		
– Non-deductible expenses	3	1
Difference from previous periods	4	–
Income tax expense for the year	**697**	**619**

(c) Deferred taxes analysed by type of temporary difference

Differences between IFRS and tax regulation in the Czech Republic give rise to temporary differences between the carrying amounts of assets and liabilities for financial reporting purposes and their tax bases. The tax effect of the movements in these temporary differences is detailed below.

In millions of Czech Crowns	1 January 2018	(Charged) / credited to profit or loss	(Charged) / credited to other comprehensive income	31 December 2018
Tax effect of deductible/(taxable) temporary differences				
Difference between tax and accounting carrying amounts of property, plant and equipment (different tax depreciation)	(6,710)	99	–	(6,611)
Other liabilities; tax deductible in different periods	31	20	–	51
Cash flow hedges	(110)	–	98	(12)
Net deferred tax asset/(liability)	**(6,789)**	**119**	**98**	**(6,572)**

Management estimates that net deferred tax liabilities of CZK 6,572 million (2017: CZK 6,789 million) are recoverable in more than twelve months after the end of the reporting period.

The tax effects of the movements in the temporary differences for the year ended 31 December 2017 were:

In millions of Czech Crowns	1 January 2017	(Charged) / credited to profit or loss	(Charged) / credited to other comprehensive income	31 December 2017
Tax effect of deductible/(taxable) temporary differences				
Difference between tax and accounting carrying amounts of property, plant and equipment (different tax depreciation)	(6,810)	100	–	(6,710)
Other liabilities; tax deductible in different periods	24	7	–	31
Provisions for liabilities and charges	31	(31)	–	–
Cash flow hedges	425	–	(535)	(110)
Net deferred tax asset/(liability)	**(6,330)**	**76**	**(535)**	**(6,789)**

(d) Tax effects in the other comprehensive income

Disclosure of tax effects relating to cash flow hedge reserve (see also Note 16):

	31 December 2018			31 December 2017		
In millions of Czech Crowns	**Before tax**	**Tax effects**	**After tax**	**Before tax**	**Tax effects**	**After tax**
Cash flow hedge	63	(12)	51	575	(110)	465
Other comprehensive income for the period	**63**	**(12)**	**51**	**575**	**(110)**	**465**

27. Contingencies and Commitments

Operating lease commitments in respect of lease agreements for offices Kavčí hory Office Park and car fleet are as follows:

In millions of Czech Crowns	2018	2017
Not later than 1 year	75	73
Total operating lease commitments	**75**	**73**

Capital expenditure commitments. As at 31 December 2018 the Group has contractual capital expenditure commitments in respect of property, plant and equipment totalling CZK 3,277 million (2017: CZK 477 million) mainly related to the Capacity4Gas project of CZK 977 million (2017: CZK 289 million) and the Czech-Polish Interconnector gas pipeline of CZK 36 million (2017: CZK 80 million).

Guarantees. The Group did not recognise any obligations from financial guarantees as at 31 December 2018 and 2017.

Assets pledged and restricted. In connection with the Group's bank borrowings, the Group's right to lien its property in favour of another creditor is restricted.

Compliance with covenants. The Group is subject to certain qualitative covenants related to its borrowings. Non-compliance with such covenants may result in immediate maturity of the debt. The Group was in compliance with covenants at 31 December 2018 and 31 December 2017.

Leased assets with a carrying amount disclosed in Note 8 are effectively pledged for finance lease liabilities in the event of the lessor's failure to fulfil the liability.

Other contingent liabilities. The Group did not recognise any significant contingent liabilities as at 31 December 2018 and 2017.

28. Derivative Financial Instruments

The table below sets out an aggregate overview of fair values of currencies receivable or payable under financial derivative contracts entered into by the Group. All derivative financial instruments are designated to hedge relationships. The table reflects gross positions before the offsetting of any counterparty positions (and payments) and covers the contracts with settlement dates after the respective end of the reporting period.

Cross currency interest rate swap contracts are long-term while foreign exchange swap contracts are short-term in nature. The respective part of fair value of a hedging derivative is classified as a non-current asset or liability if the remaining maturity of the hedged item is more than 12 months.

The Group did not have any other derivative financial instruments besides cross currency interest rate swaps and foreign exchange forwards, as at 31 December 2018.

Cash flow hedge (IFRS 7 requirements for disclosures):

- Changes in the value of the hedged item used as a basis for recognising hedge ineffectiveness for the period amount to CZK 609 million (EUR 24 million).
- The balance of the cash flow hedge reserve and the foreign currency translation reserve for continuing hedges amounts to CZK 33 million.
- The balance remaining in the cash flow hedge reserve and the foreign currency translation reserve from hedging relationships for which hedge accounting is no longer applied amounts to CZK 29 million.
- Hedging losses of the reporting period that were recognised in other comprehensive income amount to CZK 512 million.
- Hedge ineffectiveness recognised in profit or loss amounts to CZK 0 million.

	31 December 2018			
	Current		Non-Current	
In millions of Czech Crowns	**Contracts with positive fair value**	**Contracts with negative fair value**	**Contracts with positive fair value**	**Contracts with negative fair value**
Cross currency interest rate swaps: fair values, as at the reporting period, of				
EUR/USD swap				
– USD payable on settlement (-)	–	(502)	–	(11,658)
– EUR receivable on settlement (+)	–	273	–	10,445
EUR/CZK swap				
– CZK payable on settlement (-)	–	(38)	–	(1,549)
– EUR receivable on settlement (+)	–	36	–	1,504
Total USD payable on settlement (-)	–	(502)	–	(11,658)
Total EUR receivable on settlement (+)	–	309	–	11,949
Total CZK payable on settlement (-)	–	(38)	–	(1,549)
Net fair value of cross currency interest rate swaps	**–**	**(231)**	**–**	**(1,258)**

	31 December 2017			
	Current		Non-Current	
In millions of Czech Crowns	Contracts with positive fair value	Contracts with negative fair value	Contracts with positive fair value	Contracts with negative fair value
Cross currency interest rate swaps: fair values, as at the reporting period, of				
EUR/USD swap				
– USD payable on settlement (-)	–	(477)	–	(11,302)
– EUR receivable on settlement (+)	–	271	–	10,530
EUR/CZK swap				
– CZK payable on settlement (-)	–	(39)	–	(1,565)
– EUR receivable on settlement (+)	–	36	–	1,502
Net fair value of cross currency interest rate swaps	**–**	**(209)**	**–**	**(835)**

The Group had two outstanding receivables from foreign exchange forwards in amount of 473 thousand CZK as at 31 December 2018.

	31 December 2018		31 December 2017	
In thousands of Czech Crowns	Contracts with positive fair value	Contracts with negative fair value	Contracts with positive fair value	Contracts with negative fair value
Foreign exchange forwards: fair values, as at the reporting period, of				
– CZK receivable on settlement (+)	100	–	–	–
– EUR payable on settlement (-)	(100)	–	–	–
Net fair value of foreign exchange forwards – current	**–**	**–**	**–**	**–**

Cross currency interest rate swaps and foreign exchange forwards entered into by the Group are generally traded in an over-the-counter market with professional financial institutions on standardised contractual terms and conditions. The aforementioned financial instruments have potentially favourable (assets) or unfavourable (liabilities) conditions as a result of fluctuations in foreign exchange rates, market interest rates or other variables relative to their terms. The aggregate fair values of derivative financial assets and liabilities can fluctuate significantly during the life time of derivatives.

Cross currency interest rate swaps
The nominal principal amounts of the outstanding cross currency interest rate swap contracts at 31 December 2018 were EUR 410 million / USD 484 million / CZK 1,397 million (2017: EUR 410 million / USD 484 million / CZK 1,397 million). All cross currency interest rate swaps have fixed interest rates on both legs. At 31 December 2018, the fixed interest rates vary from 2.50% to 5.23% p.a. (as at 31 December 2017: 2.50% to 5.23% p.a.).

The Group designates certain cross currency interest rate swaps, in combination with bonds denominated in EUR, as hedging instrument of a foreign exchange risk associated with a highly probable forecasted cash flows from natural gas transmission revenues (cash flow hedge) – Note 3d and 29.

All derivatives are measured at FVTPL.

29. Financial Risk Management

The risk management function within the Group is carried out in respect of financial risks, operational risks, market risks and environment risks. Financial risk comprises market risk (including currency risk and interest rate risk), credit risk and liquidity risk. Management sets a strategy for each of the risk, including a limit on open position that may be accepted. The primary objectives of the financial risk management function are to set risk limits and then to ensure that exposure to risks stays within these limits. Monitoring is performed continuously but at least on a monthly basis.

Credit risk. Exposure to credit risk arises as a result of cash and cash equivalents held with banks, loans provided to related parties, billing for sales of services and other transactions with counterparties giving rise to an increase in financial assets.

The Group structures the levels of credit risk it undertakes by placing limits on the amount of risk accepted in relation to counterparties. Limits on the level of credit risk are approved by management. The risks are monitored on a revolving basis and are subject to a monthly review. The Group is exposed to credit concentration risk considering the receivables from financial institutions.

The credit risk is mitigated by advance payments and a system of creditworthiness assessment which is applied to the Group's customers, suppliers of services with potential significant credit position and financial counterparties such as banks or insurance companies. The conditions are incorporated in the Network Code, relevant tender documentations and internal guidelines.

The Group's management reviews ageing analysis of outstanding trade and other receivables and follows up on past due balances. Other relevant information ageing and other information about credit risk is disclosed in Note 13 and in Note 15.

Market risks. The Group takes on exposure to market risks. Market risks arise from open positions in (a) foreign currencies and (b) interest bearing assets and liabilities, all of which are exposed to general and specific market movements.

Sensitivities to market risks included below are based on a change in a factor while holding all other factors constant. In practice this is unlikely to occur and changes in some of the factors may be correlated – for example, changes in interest rate and changes in foreign currency rates.

Currency risk. The Group's risk management policy is to hedge the long-term contracted cash flows (mainly revenues from the gas transmission) in each major foreign currency up until 2034.

Management approves the strategy of the currency risk management. The positions are monitored continuously but at minimum on a monthly basis. The amount of risk is evaluated in terms of open positions.

The offsetting of currency positions is applied where possible. When needed the outstanding positions are managed by means of buying or selling the relevant currency in the short term derivative forward or swap contract. The Group reports two outstanding foreign exchange forwards and no outstanding foreign exchange swaps as at 31 December 2018. There were no outstanding positions from foreign exchange forwards or swaps as at 31 December 2017.

The table below summarises the Group's exposure to foreign currency exchange rate risk at the end of the reporting period:

	At 31 December 2018					At 31 December 2017				
In millions of Czech Crowns	Monetary financial assets	Monetary financial liabilities	Derivatives (assets)	Derivatives (liabilities)	Net position	Monetary financial assets	Monetary financial (liabilities)	Derivatives (assets)	Derivatives (liabilities)	Net position
US Dollars	477	1	–	10,868	(10,392)	160	4	–	10,300	(10,144)
Euros	3,067	13,416	10,547	99	99	815	13,149	–	(10,471)	(1,863)
Total exposed to currency risk	**3,544**	**13,417**	**10,547**	**10,967**	**(10,293)**	**975**	**13,153**	**–**	**(171)**	**(12,007)**
Czech Crowns	1,255	21,954	99	1,397	(14,821)	670	14,649	–	1,397	(15,376)
Total	**4,799**	**35,371**	**10,646**	**12,364**	**(25,114)**	**1,645**	**27,802**	**–**	**1,226**	**(27,383)**

As at 31 December 2018 and 2017 the outstanding derivatives, i.e. in this case cross currency interest rate swaps and foreign exchange forwards, were disclosed in their nominal amounts translated to Czech Crowns using foreign exchange rate as at 31 December 2018 and 2017. The fair values are disclosed in Note 31.

The above analysis includes only monetary assets and liabilities. Investments in non-monetary assets are not considered to give rise to any currency risk.

Hedging of currency risk. In 2014, the Group decided to introduce two cash-flow hedges to manage the foreign exchange currency risk in revenues in line with the Group risk management policy. The financial instruments designated as hedging instruments are represented by a) 33 % of bonds maturing in 2021 denominated in EUR and (b) joint hedging instrument of 66 % of bonds maturing in 2021 denominated in EUR and bonds maturing in 2026 denominated in EUR and cross currency interest rate swaps EUR/USD (Note 17, Note 28). The hedged item is represented by contracted or highly probable forecasted natural gas transmission revenues denominated in foreign currencies (in USD and in EUR) that are expected to occur on a monthly basis up until 2034. Valuation gains and losses from hedging instruments recognised in other funds in equity will be continuously released to profit or loss within finance costs up until the repayment of the hedged item and within revenue up until 2034, which is beyond the repayment date of the hedging instruments (Note 17, Note 28). There was no ineffectiveness to be recorded from cash flow hedges in 2018 and 2017. In May 2017, a bank borrowing denominated in USD was fully repaid and hedge accounting for this instrument ceased to exist.

In 2015, the Group introduced an additional, third, cash-flow hedge. The financial instruments designated as hedging instruments are represented by cross currency interest rate swap EUR/CZK (Note 17, Note 28). The hedged item is represented by cash flow related to a private placement EUR bond maturing in 2026. Gains and losses recognised in other comprehensive income will be continuously released to profit or loss within finance costs up until 2026 (Note 17, Note 28). There was no ineffectiveness to be recorded from cash flow hedges in 2018 and 2017. In 2018, there were no additional hedges.

The table below analyses the volume of hedged cash flows that were designated as hedged item:

In millions of Czech Crowns	Within 1 year	1–3 years	3–5 years	5–10 years	Over 10 years	Total
31 December 2018						
Currency risk exposure:						
Hedging of future cash flows – future receivables USD	741	1,536	1,871	5,485	1,635	11,268
Hedging of future cash flows – future receivables EUR	691	1,114	–	–	–	1,805
Hedging of future cash flows – future payables EUR	(36)	(72)	(72)	(1,394)	–	(1,574)
TOTAL	**1,396**	**2,578**	**1,799**	**4,091**	**1,635**	**11,499**

In millions of Czech Crowns	Within 1 year	1–3 years	3–5 years	5–10 years	Over 10 years	Total
31 December 2017						
Currency risk exposure:						
Hedging of future cash flows – future receivables USD	1,069	1,405	1,642	4,883	1,031	10,030
Hedging of future cash flows – future receivables EUR	566	1,404	417	–	–	2,387
Hedging of future cash flows – future payables EUR	(36)	(72)	(72)	(1,419)	–	(1,599)
TOTAL	**1,599**	**2,737**	**1,987**	**3,464**	**1,031**	**10,818**

The amount of reclassified other comprehensive income to revenues during 2018 decreased revenues by CZK 65 million (2017: decreased revenues by CZK 228 million). The amount of reclassified other comprehensive income to financial costs during 2018 increased financial costs by CZK 6 million (2017: increased financial costs by CZK 4 million).

The following table presents the sensitivities stress test of profit or loss or equity (cash flow hedge) to changes in exchange rates applied at the end of the reporting period relative to the functional currency, with all other variables held constant:

	At 31 December 2018		At 31 December 2017	
In millions of Czech Crowns	Impact on profit or loss	Impact on equity	Impact on profit or loss	Impact on equity
US Dollar strengthening by 10%	47	(1,217)	16	(955)
US Dollar weakening by 10%	(47)	1,217	(16)	955
Euro strengthening by 10%	209	(13)	76	(62)
Euro weakening by 10%	(209)	13	(76)	62

The exposure was calculated only for monetary balances denominated in currencies other than the functional currency of the respective entity of the Group and for currency sensitive derivatives.

The Group's exposure to currency risk with impact to profit or loss as at 31 December 2018 is influenced by (i) cash balances held in foreign currency, (ii) by existing loans to related parties provided in EUR (Note 12, 24 and 25) and (iii) outstanding payables and receivables.

Interest rate risk. The Group's bank borrowings are contracted at floating interest rates. Some instruments, like bonds and fix-to-fix cross currency interest rate swaps, are priced at fixed rates and are exposed to re-pricing risk at maturity. The fair value is among other factors also sensitive to interest rates through the discounted cash flow model which is used for the valuation (see Note 31a).

The table below summarises the Group's exposure to interest rate risks (e.g. term deposits; bonds and borrowings from related parties on fixed rate, both with re-pricing risk). The table presents the aggregated amounts of the Group's financial assets and liabilities at carrying amounts, categorised by the earlier of contractual interest re-pricing or maturity dates.

In millions of Czech Crowns	On demand and to 3 months	From 3 months to 12 months	From 12 months to 5 years	Over 5 years	Total
31 December 2018					
Financial assets – floating rate	1,310	–	–	–	1,310
Financial assets – fixed rate with re-pricing risk	2,787	–	–	–	2,787
Financial liabilities– floating rate	(7,171)	–	–	–	(7,171)
Financial liabilities– fixed rate with re-pricing risk	–	–	(12,186)	(8,102)	(20,288)
Net interest sensitivity gap at 31 December 2018	**(3,074)**	**–**	**(12,186)**	**(8,102)**	**(23,362)**
31 December 2017					
Financial assets – floating rate	636	–	–	–	636
Financial assets – fixed rate with re-pricing risk	300	383	–	–	683
Financial liabilities– floating rate	(7,095)	–	–	–	(7,095)
Financial liabilities– fixed rate with re-pricing risk	–	–	(14,790)	(5,403)	(20,193)
Net interest sensitivity gap at 31 December 2017	**(6,159)**	**383**	**(14,790)**	**(5,403)**	**(25,969)**

As the Group's bank assets and liabilities (borrowings) are directly exposed to the floating interest rate, the change in interest rates has an impact on the Group's profit or loss for the current year.

The following table presents sensitivities of profit or loss to reasonably possible changes in short term interest rates applied at the end of the reporting period, with all other variables held constant:

	At 31 December 2018
In millions of Czech Crowns	**Impact on profit or loss**
1M CZK PRIBOR increase of 25 bps	(15)
1M CZK PRIBOR decrease of 25 bps	15
1M EURIBOR increase of 25 bps	7
1M EURIBOR decrease of 25 bps	(7)
1M USD LIBOR increase of 25 bps	1
1M USD LIBOR decrease of 25 bps	(1)

	At 31 December 2017
In millions of Czech Crowns	**Impact on profit or loss**
1M CZK PRIBOR increase of 25 bps	(18)
1M CZK PRIBOR decrease of 25 bps	18
1M EURIBOR increase of 25 bps	–
1M EURIBOR decrease of 25 bps	–
1M USD LIBOR increase of 25 bps	–
1M USD LIBOR decrease of 25 bps	–

The Group interest rate risk management policy requires that at least 70% of the interest rate exposure arising from bonds and term loans is at fixed rate. The existing financing structure achieves this requirement.

The Group's exposure to interest rate risk as at 31 December 2018 and 2017 is representative of the typical exposure during the year, starting from July 2014. The Group monitors interest rates for its financial instruments. The table below summarises effective interest rates at the respective end of the reporting period based on reports reviewed by key management personnel. Increase in CZK effective interest rates in 2018 is caused by increased CZK base rates and refinancing of CZK 2021 bond – Note 17.

	31 December 2018			31 December 2017		
In % p.a.	CZK	USD	EUR	CZK	USD	EUR
Assets						
Cash and cash equivalents	1,38	0,90	0,10	0.08	0.00	0.00
Loans to related parties	n/a	3,08	0,33	n/a	n/a	0.32
Liabilities						
Borrowings	2,53	n/a	3,00	1.89	n/a	3.00

Liquidity risk. Liquidity risk is the risk that an entity will encounter difficulty in meeting obligations associated with financial liabilities. The Group is exposed to daily calls on its available cash resources. Liquidity risk is managed by Treasury department of the Group and monitored in terms of monthly (one month forward), short-term (one year forward) and mid-term (five years forward) forecasts. Management monitors short-term forecasts of the Group's cash flows provided on a monthly basis.

The Group has such a liquidity position that is able to secure its operating funding needs through the cash collected from the business operations continuously throughout the year. The Group's liquidity portfolio comprises cash and cash equivalents (Note 15) and bank term deposits and deposit bills. Management estimates that the liquidity portfolio can be realised in cash within few days in order to meet unforeseen liquidity requirements.

The tables below show liabilities as at 31 December 2018 and 2017 by their remaining contractual maturity. The amounts disclosed in the table below are the contractual undiscounted cash flows and gross loan commitments. Such undiscounted cash flows differ from the amount included in the balance sheet because the balance sheet amount is based on discounted cash flows Financial derivatives are included at the contractual amounts to be paid or received, unless the Group expects to close the derivative position before its maturity date in which case the derivatives are included based on the expected cash flows.

When the amount payable is not fixed, the amount disclosed is determined by reference to the conditions existing at the end of the reporting period. Foreign currency payments are translated using the spot exchange rate at the end of the reporting period.

The maturity analysis of financial liabilities at 31 December 2018 is as follows:

In millions of Czech Crowns	Demand and to 3 months	From 3 months to 12 months	From 12 months to 5 years	Over 5 years	Total
Liabilities					
Bank borrowings, bonds and borrowings from related parties (Note 17)	159	583	21,294	8,730	30,766
Trade and other payables (Note 21)	703	–	10	–	713
Gross settled cross currency interest rate swaps (Note 28)					
– inflows	–	(309)	(6,123)	(5,942)	(12,374)
– outflows	–	548	7,727	7,114	15,389
Total future payments, including future principal and interest payments	**862**	**822**	**22,908**	**9,902**	**34,494**

The maturity analysis of financial liabilities at 31 December 2017 is as follows:

In millions of Czech Crowns	Demand and to 3 months	From 3 months to 12 months	From 12 months to 5 years	Over 5 years	Total
Liabilities					
Bank borrowings, bonds and borrowings from related parties (Note 17)	179	461	23,824	6,079	30,543
Trade and other payables (Note 21)	517	–	13	–	530
Gross settled cross currency interest rate swaps (Note 28)					
– inflows	–	(306)	(6,206)	(6,079)	(12,591)
– outflows	–	522	7,571	7,103	15,196
Total future payments, including future principal and interest payments	**696**	**677**	**25,202**	**7,103**	**33,678**

The net current liquidity position calculated as difference between current assets and current liabilities at 31 December 2018 is a net current receivable of CZK 3,503 million (31 December 2017: CZK 713 million).

Payments in respect of cross currency interest rate swaps will be accompanied by related cash inflows which are disclosed at their present values in Note 28.

30. Management of Capital

The Group's objectives when managing capital are to safeguard the Group's ability to continue as a going concern in order to provide returns for shareholders and benefits for other stakeholders. The Group manages its capital ratios to ensure a strong credit rating (e.g. the Group may adjust the amount of dividends paid to shareholders in order to maintain or adjust the capital structure).

According to the Group's policy, capital structure consists mainly of equity, non-subordinated borrowings from banks, non-subordinated bonds and non-subordinated short-term borrowings from related parties.

In millions of Czech Crowns	At 31 December 2018	At 31 December 2017
Equity	11,434	9,230
Non-subordinated borrowings from banks and bonds	27,378	27,265
Non-subordinated short-term borrowings from related parties	19	22
Total	**38,831**	**36,517**

The Group has complied with all covenants arising from the borrowings as at 31 December 2018 and 2017.

31. Fair Value of Financial Instruments

Fair value measurements are analysed by level in the fair value hierarchy. Management applies judgement in categorising financial instruments using the fair value hierarchy. If a fair value measurement uses observable inputs that require significant adjustment, that measurement is a Level 3 measurement. The significance of a valuation input is assessed against the fair value measurement in its entirety.

(a) Recurring fair value measurements
Recurring fair value measurements are those that the accounting standards require or permit in the balance sheet at the end of each reporting period:

(b) Financial instruments carried at fair value
Only derivatives are measured at fair value.

All recurring fair value measurements are categorised in the fair value hierarchy into level 2 as at 31 December 2018 and 2017.

There have been no changes in the valuation technique for level 2 since 31 December 2017.

The description of valuation technique and description of inputs used in the fair value measurement for level 2 measurements at 31 December 2018:

In millions of Czech Crowns	Fair value	Valuation technique	Inputs used
Derivative financial instruments			
Cross currency interest rate swap contracts	1,489	Discounted cash flow method	Czech National Bank foreign exchange rates, inter-bank swap rates
Currency forward contracts	–	Discounted cash flow method	Czech National Bank foreign exchange rates, inter-bank swap rates
TOTAL RECURRING FAIR VALUE MEASUREMENTS AT LEVEL 2	**1,489**	**–**	**–**

The description of valuation technique and description of inputs used in the fair value measurement for level 2 measurements at 31 December 2017:

In millions of Czech Crowns	Fair value	Valuation technique	Inputs used
Derivative financial instruments			
Cross currency interest rate swap contracts	(1,044)	Discounted cash flow method	Czech National Bank foreign exchange rates, inter-bank swap rates
Currency forward contracts	n/a	n/a	n/a
TOTAL RECURRING FAIR VALUE MEASUREMENTS AT LEVEL 2	**(1,044)**	**–**	**–**

The following table presents movements in fair values of derivative financial instruments:

In millions of Czech Crowns	2018	2017
Opening balance	**(1,044)**	**(2,770)**
Change in fair value of contracts concluded and realised during the period	30	(37)
Settlement of contracts concluded and realised during the period	(30)	37
Change in unrealised gains or losses for the period included in other comprehensive income for contracts held at the end of the reporting period	(445)	1,726
Closing balance	**(1,489)**	**(1,044)**

(c) Non-recurring fair value measurements

There are no assets held for sale or other items with non-recurring fair value measurements as at 31 December 2018 and 31 December 2017.

(d) Financial assets and liabilities not measured at fair value but for which fair value is disclosed

Fair values analysed by level in the fair value hierarchy and carrying value of assets and liabilities not measured at fair value are as follows:

	31 December 2018				31 December 2017			
In millions of Czech Crowns	Level 1	Level 2	Level 3	Carrying value	Level 1	Level 2	Level 3	Carrying value
ASSETS								
Other financial assets								
– Loans to related parties	–	–	8	8	–	–	5	5
Total ASSETS	**–**	**–**	**8**	**8**	**–**	**–**	**5**	**5**
LIABILITIES								
Borrowings								
– Borrowings from related parties	–	–	19	19	–	–	22	22
– Bank borrowings	–	–	7,104	7,090	–	–	7,122	7,731
– Bonds	19,826	–	1,342	20,288	20,357	–	1,388	20,192
TOTAL LIABILITIES	**19,826**	**–**	**8,465**	**27,397**	**20,357**	**–**	**8,532**	**27,945**

Trade and other receivables' carrying values approximate to their fair values.

The fair values in level 1 of fair value hierarchy reflects the price of fixed interest rate bonds listed in active markets in public stock exchanges.

The fair values in level 3 of fair value hierarchy were estimated using the discounted cash flows valuation technique. Inputs used for loans to related parties are market observable (PRIBOR, LIBOR, EURIBOR) adjusted by unobservable estimated credit spreads. Inputs used for bank borrowings, borrowings from related parties and financial leases are market observable (PRIBOR, LIBOR, EURIBOR and IRS) adjusted by unobservable estimated credit spreads.

The fair value of unquoted bonds was determined based on estimated future cash flows expected to be received discounted by market observable yield curve adjusted by unobservable estimated credit spread.

Financial assets measured at amortised cost. The estimated fair value of asset instruments is based on estimated future cash flows expected to be received discounted at current interest rates for new instruments with similar credit risk and remaining maturity.

Financial liabilities measured at amortised cost. The estimated fair value of liability instruments is based on expected cash flows discounted at current interest rates for new instruments with similar credit risk and remaining maturity.

32. Subsequent Events

No events have occurred subsequent to year-end that would have a material impact on the consolidated financial statements for the year ended 31 December 2018.

Signature of the members of the statutory body of the Company:

11 March 2019

Andreas Rau Statutory Director	**Radek Benčík** Statutory Director	**Václav Hrach** Statutory Director

The General Meeting approved the consolidated financial statements for publication on 12 April 2019.

NET4GAS Group
Notes to the Consolidated Financial Statements
for the year ended 31 December 2018

ANNEX NO. 2: SEPARATE FINANCIAL STATEMENTS

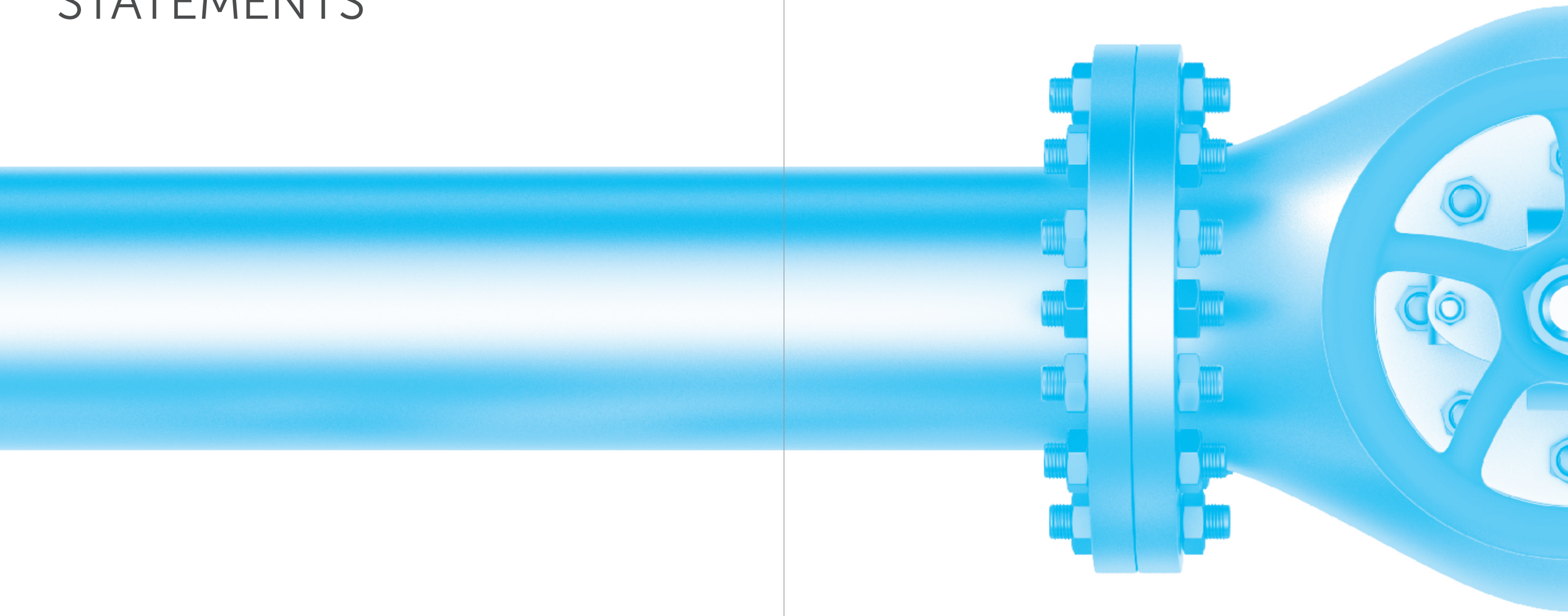

NET4GAS, s.r.o. SEPARATE FINANCIAL STATEMENTS

prepared in accordance with International Financial Reporting Standards
as adopted by the European Union, 31 December 2018

Contents

NET4GAS, s.r.o.
Separate Balance Sheet as at 31 December 2018

In millions of Czech Crowns	Note	31 December 2018	31 December 2017
ASSETS			
NON-CURRENT ASSETS			
Property, plant and equipment	8	42,738	43,177
Intangible assets	9	68	78
Investment in subsidiary	10	6,587	6,732
Other non-current assets	11	220	25
Total non-current assets		**49,613**	**50,012**
CURRENT ASSETS			
Inventories	12	65	61
Trade and other receivables	14	704	324
Current income tax prepayments	29	73	247
Loans to related parties	13	8	5
Other non-financial assets	15	48	32
Other financial assets	15	2,787	683
Cash and cash equivalents	16	1,297	625
Total current assets		**4,982**	**1,977**
TOTAL ASSETS		**54,595**	**51,989**
EQUITY AND LIABILITIES			
EQUITY			
Registered capital	17	2,750	2,750
Capital contributions outside registered capital	17	4,549	3,364
Cash flow hedge reserve	17	51	465
Retained earnings	17	2,643	–
Advance dividends	17	(1,500)	–
Profit for the year		2,938	2,643
Total equity		**11,431**	**9,222**
NON-CURRENT LIABILITIES			
Other payables	23	10	13
Borrowings	18	27,106	26,988
Finance lease liability	19	6,907	7,023
Derivative financial instruments	31	1,258	835
Deferred income tax liability	29	6,022	6,321
Accrued employee benefits	24	105	101
Other non-financial liabilities	24	10	7
Total non-current liabilities		**41,418**	**41,288**

The accompanying notes on pages 100 to 153 are an integral part of these separate financial statements.

In millions of Czech Crowns	Note	31 December 2018	31 December 2017
CURRENT LIABILITIES			
Borrowings	18	353	299
Finance lease liability	19	197	198
Trade and other payables	23	714	528
Derivative financial instruments	31	231	209
Other taxes payable	21	18	18
Provisions	22	–	2
Accrued employee benefits	24	56	43
Other non-financial liabilities	24	177	182
Total current liabilities		**1,746**	**1,479**
Total liabilities		**43,164**	**42,767**
EQUITY AND LIABILITIES		**54,595**	**51,989**

11 March 2019

Andreas Rau
Statutory Director

Radek Benčík
Statutory Director

Václav Hrach
Statutory Director

The accompanying notes on pages 100 to 153 are an integral part of these separate financial statements.

NET4GAS, s.r.o.
Separate Statement of Profit or Loss and Other Comprehensive Income for the year ended 31 December 2018

In millions of Czech Crowns	Note	2018	2017
Revenue	6	7,340	7,401
Raw materials consumed	25	(97)	(302)
Services purchased and lease charges	25	(433)	(308)
Employee benefits	25	(458)	(439)
Depreciation and amortisation	8, 9, 25	(1,884)	(2,007)
Gains less losses on disposal of property, plant and equipment		(1)	–
Changes in fair value of derivatives, net		40	(37)
Foreign exchange differences, net	25	30	(100)
Other operating income	26	435	437
Other operating expenses	25	(37)	(40)
Operating profit		**4,935**	**4,605**
Finance income	27	53	4
Finance costs	28	(1,443)	(1,439)
Finance result (net)		**(1,390)**	**(1,435)**
Profit before income tax		**3,545**	**3,170**
Income tax expense	29	(607)	(527)
PROFIT FOR THE YEAR		**2,938**	**2,643**
Other comprehensive income / (loss)			
Items that may be subsequently reclassified to profit or loss			
Cash flow hedge	17	(512)	2,813
Income tax recognised directly in other comprehensive income – cash flow hedge	29	98	(535)
TOTAL OTHER COMPREHENSIVE INCOME FOR THE YEAR		**(414)**	**2,278**
TOTAL COMPREHENSIVE INCOME FOR THE YEAR		**2,524**	**4,921**

The accompanying notes on pages 100 to 153 are an integral part of these separate financial statements.

NET4GAS, s.r.o.
Separate Statement of Changes in Equity for the year ended 31 December 2018

In millions of Czech Crowns	Registered capital	Capital contributions outside registered capital	Cash flow hedges reserve	Retained earnings	Total
Balance as at 1 January 2017	**2,750**	**6,631**	**(1,813)**	**21**	**7,589**
Total comprehensive income					
Profit for the year 2017	–	–	–	2,643	2,643
Cash flow hedge – net of related tax effect	–	–	2,278	–	2,278
Total comprehensive income for the year	–	–	2,278	2,643	4,921
Transactions with owners					
Decrease of contribution outside registered capital (Note 17)	–	(3,622)	–	–	(3,622)
Contribution outside registered capital (Note 17)	–	355	–	–	355
Dividends paid	–	–	–	(21)	(21)
Balance as at 31 December 2017	**2,750**	**3,364**	**465**	**2,643**	**9,222**
Total comprehensive income					
Profit for the year 2018	–	–	–	2,938	2,938
Cash flow hedge – net of related tax effect	–	–	(414)	–	(414)
Total comprehensive income for the year	–	–	(414)	2,938	2,524
Transactions with owners					
Contribution outside registered capital (Note 17)	–	1,185	–	–	1,185
Advance dividends paid	–	–	–	(1,500)	(1,500)
Balance as at 31 December 2018	**2,750**	**4,549**	**51**	**4,081**	**11,431**

The accompanying notes on pages 100 to 153 are an integral part of these separate financial statements.

NET4GAS, s.r.o.
Separate Statement of Cash Flows
for the year ended 31 December 2018

In millions of Czech Crowns	Note	2018	2017
Cash flows from operating activities			
Profit before tax		**3,545**	**3,170**
Adjustments for:			
Depreciation and amortisation	8, 9	1,884	2,007
Finance income	27	(53)	(4)
Finance costs	28	1,443	1,439
Gains less losses on disposals of property, plant and equipment		1	–
Dividend income from subsidiary		(390)	(400)
Other non-cash operating expenses / (gains)		44	(107)
thereof: *– employee benefit provisions*		*17*	*29*
– release of provisions		*(2)*	*(167)*
– other		*29*	*31*
Operating cash flows before working capital changes		**6,474**	**6,105**
Decrease / (Increase) in trade and other receivables	14, 15	(391)	(27)
Increase / (Decrease) in trade and other payables	23, 24	(257)	(90)
Decrease in inventories	12	(4)	2
Operating cash flows after changes in working capital		**5,822**	**5,990**
Interest paid	28	(1,133)	(1,097)
Interest received	27	5	1
Income tax paid	29	(634)	(1,115)
Net cash flows from operating activities		**4,060**	**3,779**
Cash flows from investing activities			
Purchase of property, plant and equipment	8	(1,377)	(713)
Purchase of intangible fixed assets	9	(27)	(30)
Proceeds from decreased other capital funds of the subsidiary	10	145	744
Loans provided to related parties	13	(3)	5
Purchase of other financial assets	15	(2,104)	(683)
Dividends received from subsidiary	26	390	400
Net cash flows used in investing activities		**(2,976)**	**(277)**

The accompanying notes on pages 100 to 153 are an integral part of these separate financial statements.

In millions of Czech Crowns	Note	2018	2017
Cash flows from financing activities:			
Payments of decreased contributions outside registered capital to the Company's owner	17	–	(3,000)
Payments of increased contributions outside registered capital from the Company's owner	17	1,185	355
Advance dividends paid to the Company's owner	17	(1,500)	–
Repayment of borrowings	18	(1,323)	(8,570)
Proceeds from borrowings	18	1,226	7,928
Net cash flows from financing activities		**(412)**	**(3,287)**
Net (decrease) in cash and cash equivalents		**672**	**215**
Cash and cash equivalents at the beginning of the year	16	625	410
Cash and cash equivalents at the end of the year	16	**1,297**	**625**

The accompanying notes on pages 100 to 153 are an integral part of these separate financial statements.

NET4GAS, s.r.o. NOTES TO THE SEPARATE FINANCIAL STATEMENTS

for the year ended 31 December 2018

1. NET4GAS, s.r.o. and Its Operations – General Information

These separate financial statements have been prepared in accordance with International Financial Reporting Standards as adopted by the European Union for the year ended 31 December 2018 for NET4GAS, s.r.o. (the "Company" or "NET4GAS").

The Company was incorporated and is domiciled in the Czech Republic, where its principal place of business is also located. The Company is a limited liability company. It was incorporated on 29 June 2005 and has its registered office at Na Hřebenech II 1718/8, Prague 4 – Nusle, the Czech Republic. The Company's identification number is 272 60 364.

The Company's main business activity is natural gas transmission in accordance with Act No. 458/2000 Coll. (the "Energy Act").

Since 2 August 2013, the Company has been fully owned by NET4GAS Holdings, s.r.o. ("NET4GAS Holdings"), incorporated in the Czech Republic, which is the Company's ultimate parent company. NET4GAS Holdings is a joint venture of two entities: Allianz Infrastructure Czech HoldCo II S.à r.l. (50%), with its registered office in Luxembourg, and Borealis Novus Parent B.V. (50%), with its registered office in the Netherlands.

The Statutory Directors of the Company:

As at 31 December 2018	As at 31 December 2017
Andreas Rau	Andreas Rau
Radek Benčík	Radek Benčík
Václav Hrach	Václav Hrach

The members of the Supervisory Board of the Company were as follows:

As at 31 December 2018	Function	As at 31 December 2017	Function
Kenton Edward Bradbury	Chairman	Kenton Edward Bradbury	Chairman
Jaroslava Korpancová	Member	Jaroslava Korpancová	Member
Mikhail Nahorny	Member	Mikhail Nahorny	Member
Andrew Cox	Member	Andrew Cox (since 11 May 2017)	Member
Georg Nowack (since 6 December 2018)	Member	Lenka Kovačovská	Member

Georg Nowack became a member of the Supervisory Board on 6 December 2018 and the change was registered in the Commercial Register on 14 January 2019.

Lenka Kovačovská was recalled from the Supervisory Board on 14 September 2018 and the change was registered in the Commercial Register on 9 October 2018.

About the Company. The Company is the exclusive gas transmission system operator in the Czech Republic, operating more than 3,800 km of gas pipelines. NET4GAS is currently operating four compressor stations. The flow rate of the gas transmitted is measured at five border transfer stations (the Lanžhot, Brandov and Hora Svaté Kateřiny stations in the Czech Republic, and the Waidhaus and Olbernhau stations in the Federal Republic of Germany) and at almost a hundred national transfer stations. The NET4GAS transmission system has been specifically targeted in the past few years for a number of new projects delivering additional transmission capacity and greater diversification of transmission routes. These projects have included the construction of the GAZELLE high-pressure gas pipeline (DN 1400, put in operation in 2013), connecting the transmission systems of the Czech Republic and the Federal Republic of Germany at the border points Brandov and Rozvadov, and a project connecting the Czech and Polish transmission systems in Český Těšín. The entire

NET4GAS transmission system can also be used for reverse flow, which means that it now has the capacity and technology to cope with natural gas transmission in any direction. The largest project of the company is the Capacity4Gas Project. The project is part of a larger initiative to provide secure and cost-efficient access to gas supplies via additional pipeline capacities, especially in the Baltic Sea. Simultaneously, the newly-created infrastructure in the Czech Republic will be made available to all interested market participants on a fully transparent and non-discriminatory basis for the transportation of any kind of natural gas regardless of its country of origin, be it Norway, Russia or North America. The Capacity4Gas project will contribute to enhancing the security of gas supplies in the Czech Republic and in the entire CEE region. In addition, the project will strengthen the Czech Republic's strategic role in cross/border gas transmission. The objective of the Capacity4Gas project is to build new gas infrastructure, most of which is to be located in the Ústí nad Labem and Pilsen regions. The aim of the project is to connect the gas infrastructure operated by NET4GAS with the planned EUGAL pipeline in Germany and to increase its capacity for the needs of gas supplies in the Czech Republic and further transit via Slovakia. The project will be implemented in two stages, with completion scheduled for 2019 and 2020, respectively.

The Company is the successor to Tranzitní plynovod, n. p., Transgas, a.s., and RWE Transgas Net, s.r.o.

The Company founded BRAWA, a.s. ("BRAWA"), as its subsidiary on 10 October 2010. Until 1 January 2013, BRAWA, a.s. had been a dormant company. On 1 January 2013, under the legal reorganisation of NET4GAS's business, the GAZELLE pipeline was transferred to BRAWA and BRAWA became the sole owner of the GAZELLE pipeline. The GAZELLE pipeline is operated by NET4GAS.

Note

The separate financial statements have been prepared in Czech and in English. In all matters of interpretation of information, views or opinions, the Czech version of these financial statements takes precedence over the English version.

2. Operating Environment of the Group

The regulatory environment in the Czech Republic:

(a) Legal framework pertaining to the transmission system operator

The transmission system operator holds an exclusive gas transmission licence under the Energy Act, and its operations are regulated by the Energy Regulatory Office (the "ERO").

The transmission system operator's rights and obligations are primarily derived from Section 58 of the Energy Act and are clarified in more detail in the related implementing legislation. The transmission system operator is also required to comply with obligations under the European legislation, in particular Regulation (EC) No 715/2009 on conditions for access to the natural gas transmission networks and the related implementing legislation.

(b) Regulatory framework pertaining to the transmission system operator

Gas transmission prices are set annually by the ERO based on regulation methodology applicable in the regulatory period. Gas transmission prices for the next calendar year are usually published in an ERO's Pricing Decision by 30 November of the current year.

The 2018 gas transmission prices were established by ERO's Price Decision No 5/2017 of 21 November 2017, on Regulated Prices Related to Gas Supply.

(c) Current regulatory period

The transmission system operator is currently subject to regulatory period IV, which began on 1 January 2016 and ends on 31 December 2020 (the ERO extended the original three-year period by two years on 11 January 2018).

(d) Domestic transmission regulation methodology applicable in the fourth regulatory period

The transmission system operator regulation methodology for domestic gas transmission is based on a ceiling established for allowed revenues over a predetermined period (the revenue cap method).

Domestic gas transmission prices are subsequently derived from allowed revenues defined in this manner.

These prices consist of a fixed component for booked transmission capacity and a variable component depending on the amount of gas transmitted.

(e) Transit transmission regulation methodology applicable in the fourth regulatory period

The transmission system operator regulation methodology for transit transmission is subject to a price ceiling (of allowed prices) for a predetermined period (the price cap method). Allowed prices are set annually by the ERO based on a comparison of gas transmission prices in other relevant Member States of the European Union (benchmarking). These prices also consist of a fixed component for booked transmission capacity and a variable component depending on the amount of gas transmitted.

(f) Unregulated part

Further to a decision of the ERO of 28 July 2011, the GAZELLE interconnecting pipeline was exempted from the obligation to grant third-party access at a regulated price under the conditions set out in the Energy Act.

3. Summary of Significant Accounting Policies

a) Basis of preparation

These separate financial statements of the Company have been prepared in accordance with International Financial Reporting Standards as adopted by the European Union ("IFRS") under the historical cost convention, as modified by the revaluation of relevant financial assets and financial liabilities (including derivative instruments) carried at fair value. The principal accounting policies applied in the preparation of these separate financial statements are set out below. These policies have been consistently applied to all the periods presented.

Preparation of financial statements in conformity with IFRS requires the use of certain critical accounting estimates. It also requires management to exercise its judgement in the process of applying the Company's accounting policies. The areas involving a higher degree of judgment or complexity, or areas where assumptions and estimates are significant to the separate financial statements are disclosed in Note 4.

These separate financial statements relate to the consolidated financial statements prepared for the Company and its subsidiary BRAWA. They should be read together.

Presentation currency. These separate financial statements ("financial statements") are presented in Czech Crowns ("CZK") which is also the functional currency of the Company.

b) Financial instruments – key measurement terms

Depending on their classification, financial instruments are carried at fair value or amortised cost as described below.

Fair value is the price that would be received to sell an asset or paid to transfer a liability in an orderly transaction between market participants at the measurement date. The best evidence of fair value is a price in an active market. An active market is one in which transactions for the asset or liability take place with sufficient frequency and volume to provide pricing information on an ongoing basis.

All purchases and sales of financial assets that require delivery within the time frame established by regulation or market convention ("regular way" purchases and sales) are recorded at the trade date, which is the date on which the Company commits to deliver the financial asset. All other purchases are recognised when the Company becomes a party to the contractual provisions of the instrument.

Fair value of financial instruments traded in an active market is measured as the product of the quoted price for the individual asset or liability and the quantity held by the Company. This is the case even if a market's normal daily trading volume is not sufficient to absorb the quantity held and placing orders to sell the position in a single transaction might affect the quoted price.

A portfolio of financial derivatives that are not traded in an active market is measured at the fair value of a group of financial assets and financial liabilities on the basis of the price that would be received to sell a net long position (i.e. an asset) for a particular risk exposure or paid to transfer a net short position (i.e. a liability) for a particular risk exposure in an orderly transaction between market participants at the measurement date. This is applicable for assets carried at fair value on a recurring basis if the Company:

(a) manages the group of financial assets and financial liabilities on the basis of the Company's net exposure to a particular market risk (or risks) or to the credit risk of a particular counterparty in accordance with the Company's documented risk management or investment strategy; (b) it provides information on that basis about the group of assets and liabilities to the Company's key management personnel; and (c) the market risks, including duration of the Company's exposure to a particular market risk (or risks) arising from the financial assets and financial liabilities is substantially the same.

Fair value measurements are analysed in the fair value level hierarchy as follows (Note 34):

(i) Level one are measurements at quoted prices (unadjusted) in active markets for identical assets or liabilities, (ii) level two measurements are valuations techniques with all material inputs observable for the asset or liability, either directly (that is, as prices) or indirectly (that is, derived from prices), and (iii) level three measurements are valuations not based solely on observable market data (that is, the measurement requires significant unobservable inputs). Transfers between levels of the fair value hierarchy are deemed to have occurred at the end of the reporting period.

Transaction costs are incremental costs that are directly attributable to the acquisition, issue or disposal of a financial instrument. An incremental cost is one that would not have been incurred if the transaction had not taken place. Transaction costs include fees and commissions paid to agents (including employees acting as selling agents), advisors, brokers and dealers, levies by regulatory agencies and securities exchanges, and transfer taxes and duties. Transaction costs do not include debt premiums or discounts, financing costs or internal administrative or holding costs.

Amortised cost is the amount at which the financial instrument was recognised at initial recognition less any principal repayments, plus accrued interest, and for the gross carrying amount of financial assets less expected credit losses. Accrued interest includes amortisation of transaction costs deferred at initial recognition and of any premium or discount to maturity amount using the effective interest method. Accrued interest income and accrued interest expense, including both accrued coupon and amortised discount or premium (including fees deferred at origination, if any), are not presented separately and are included in the carrying amounts of related items in the balance sheet.

The effective interest method is a method of allocating interest income or interest expense over the relevant period, so as to achieve a constant periodic rate of interest (effective interest rate) on the carrying amount. The effective interest rate is the rate that exactly discounts estimated future cash payments or receipts (excluding future credit losses) through the expected life of the financial instrument to the net carrying amount of the financial instrument. The effective interest rate discounts cash flows of variable interest instruments to the next interest repricing date, except for the premium or discount which reflects the credit spread over the floating rate specified in the instrument, or other variables that are not reset to market rates. Such premiums or discounts are amortised over the whole expected life of the instrument. The present value calculation includes all fees paid or received between parties to the contract that are an integral part of the effective interest rate.

c) Classification of financial assets

Financial assets are classified in the following categories:

- Financial assets measured at amortised cost (AC)
- Financial assets measured at fair value:
  - through other comprehensive income (FVTOCI)
  - through profit or loss (FVTPL)

Financial assets measured at amortised cost (AC):

Debt instruments are measured at amortised cost if they meet the following two criteria:

- Business model test: the objective is to hold the financial asset to collect the contractual cash flows (rather than to sell the instrument prior to its contractual maturity to realise its fair value changes).

- Cash flow characteristics test: contractual cash flows from a financial asset are solely payments of principal and interest, where the most significant elements of interest only include the time value of money, credit risk of the counterparty, other basic lending costs (for example, liquidity and administration) and a reasonable profit margin.

Financial assets measured at fair value through profit or loss

Financial assets at fair value through profit or loss, including financial derivatives are carried at their fair value. All derivative instruments are carried as assets when fair value is positive and as liabilities when fair value is negative. The method of recognising the resulting gain or loss depends on whether the derivative is designated as a hedging instrument, and if so, the nature of the item being hedged. The Company designates certain derivatives as hedges of a particular risk associated with a fixed commitment or highly probable forecast transaction (cash flow hedge).

The Company documents at the inception of the transaction the relationship between hedging instruments and hedged items, as well as its risk management objectives and strategy for undertaking various hedging transactions. The Company also documents its assessment, both at hedge inception and on an ongoing basis, of whether the derivatives that are used in hedging transactions are highly effective in offsetting changes in fair values or cash flows of hedged items.

The fair values of various derivative instruments used for hedging purposes are disclosed in Note 31. Movements on the hedging reserve in other comprehensive income are shown in Note 17. The full fair value of a hedging derivative is classified as a non-current asset or liability when the remaining maturity of the hedged item is more than 12 months, and as a current asset or liability when the remaining maturity of the hedged item is less than 12 months. Trading derivatives are classified as a current asset or liability.

Cash flow hedge: The effective portion of changes in the fair value of derivatives that are designated and qualify as cash flow hedges is recognised in other comprehensive income. The gain or loss relating to the ineffective portion is recognised immediately in the profit or loss within 'Finance costs' or 'Finance income'. Amounts accumulated in equity are recognised in profit or loss in the periods when the hedged item affects profit or loss (for example, when the forecast sale that is hedged takes place). The gain or loss relating to the effective portion of cross currency interest rate swaps hedging currency risk is recognised in profit or loss under revenues (in respect of a foreign-currency revenues hedge) or within Finance income or Finance costs (in respect of a cash flow hedge relating to issued foreign-currency bonds).

When a hedging instrument expires or is sold, or when a hedge no longer meets the criteria for hedge accounting, any cumulative gain or loss existing in equity at that time remains in equity and is recognised in profit or loss when the forecast transaction is ultimately recognised in profit or loss. When a forecast transaction is no longer expected to occur, the cumulative gain or loss that was recorded in other comprehensive income is immediately transferred to profit or loss within Finance costs or Finance income.

The Company does not hold any financial assets measured at FVTOCI.

d) Classification of financial liabilities

Financial liabilities have the following measurement categories: (a) held for trading which also includes financial derivatives, and (b) other financial liabilities. Liabilities held for trading are carried at fair value with changes in value recognised in profit or loss for the year (as finance income or finance costs) in the period in which they arise. Other financial liabilities are carried at amortised cost.

The Company designates certain financial liabilities as hedges of a particular risk associated with highly probable forecast transactions (cash flow hedge – Note 32, section 'Currency Risk').

e) Initial recognition of financial instruments

Financial instruments not carried at fair value through profit or loss are initially recognised at fair value plus transaction costs. Financial instruments carried at fair value through profit or loss are initially recognised at fair value, and transaction costs are expensed in profit or loss. Fair value at initial recognition is best evidenced by the transaction price. A gain or loss on initial recognition is only recorded if there is a difference between fair value and transaction price which can be

evidenced by other observable current market transactions in the same instrument or by a valuation technique whose inputs include only data from observable markets.

The Company uses discounted cash flow valuation techniques to determine the fair value of cross-currency interest rate swaps and loans that are not traded in an active market. Differences may arise between the fair value at initial recognition determined at initial recognition using the valuation techniques and the transaction price. Any such differences are amortised on a straight line basis over the term of the cross-currency interest rate swaps and loans to related parties.

f) Derecognition of financial assets and financial liabilities

The Company derecognises financial assets when (a) the assets are redeemed or the rights to cash flows from the assets otherwise expire or (b) the Company has transferred the rights to the cash flows from the financial assets or entered into a qualifying pass-through arrangement while (i) also transferring substantially all risks and rewards of ownership of the assets or (ii) neither transferring nor retaining substantially all risks and rewards of ownership but not retaining control.

Control is retained if the counterparty does not have the practical ability to sell the asset in its entirety to an unrelated third party without needing to impose additional restrictions on the sale.

If the financial asset is fully derecognised, it is recognised through profit or loss as a gain or loss on sale equal to the difference between the carrying amount of the asset and the payment received.

The Company derecognises financial liabilities only when the contractual liabilities of the Company are discharged, cancelled or expire (or when the terms of the existing liability or a part thereof are significantly modified). The difference between the carrying amount of a derecognised financial liability and the consideration paid or payable is recognised in profit or loss.

g) Property, plant and equipment

Property, plant and equipment are stated at cost, less accumulated depreciation and provision for impairment, where required.

Significant spare parts are recognised and treated as property, plant and equipment.

Repairs and maintenance expenditures are expensed as incurred. Cost of replacing major parts or components of property, plant and equipment items are capitalised and the replaced part is retired. Subsequent costs are included in the asset's carrying amount or recognised as a separate asset, as appropriate, only when it is probable that future economic benefits associated with the item will flow to the Company and the cost of the item can be measured reliably.

At the end of each reporting period management assesses whether there is any indication of impairment of property, plant and equipment. If any such indication exists, management estimates the recoverable amount, which is determined as the higher of an asset's fair value less costs to sell and its value in use. The carrying amount is reduced to the recoverable amount and the impairment loss is recognised in profit or loss for the year. An impairment loss recognised for an asset in prior years is reversed where appropriate if there has been a change in the estimates used to determine the asset's value in use or fair value less costs to sell.

Gains and losses on disposals are determined by comparing proceeds with the carrying amount and are recognised in profit or loss for the year.

When the Company recognises the cost of a replacement as part of the carrying amount of property, plant and equipment, it derecognises the carrying amount of the replaced part regardless of whether the replaced part had been depreciated separately. If it was not practicable to determine the carrying amount of the replaced part, the Company used the cost of the replacement as an indication of what the cost of the replaced part was at the time it was acquired or constructed.

h) Depreciation

Land is not depreciated. Construction in progress is not depreciated. Depreciation on other assets is calculated using the straight-line method. Depreciation rates are determined based on estimated useful lives:

	Useful lives
Buildings and constructions	30 – 70 years
Plant, machinery and equipment	4 – 40 years
Furniture and fittings	4 – 8 years
Motor vehicles	5 – 8 years

The assets' residual values and useful lives are reviewed, and adjusted if appropriate, at the end of each reporting period.

i) Capitalisation of borrowing costs

General and specific borrowing costs directly attributable to the acquisition, construction or production of assets that are not carried at fair value and that necessarily take a substantial time to get ready for the intended use or sale (qualifying assets) are capitalised as part of the costs of those assets.

The commencement date for capitalisation is when (a) the Company incurs expenditures for the qualifying asset; (b) it incurs borrowing costs; and (c) it undertakes activities that are necessary to prepare the asset for its intended use or sale.

Capitalisation of borrowing costs continues up to the date when the assets are substantially ready for their use or sale.

The Company capitalises borrowing costs that could have been avoided if it had not made capital expenditure on qualifying assets. Borrowing costs capitalised are calculated at the Company's average funding cost (the weighted average interest cost is applied to the expenditures on the qualifying assets), except to the extent that funds are borrowed specifically for the purpose of obtaining a qualifying asset. Where this occurs, actual borrowing costs incurred on the specific borrowings less any investment income on the temporary investment of these borrowings are capitalised. The amounts of borrowing costs capitalised during the current and previous year are disclosed in Note 8.

j) Leasing

Operating leases. Where the Company is a lessee in a lease which does not transfer substantially all the risks and rewards incidental to ownership from the lessor to the Company, the total lease payments are charged to profit or loss for the year on a straight-line basis over the lease term. The lease term is the non-cancellable period for which the lessee has contracted to lease the asset together with any further terms for which the lessee has the option to continue to lease the asset, with or without further payment, when at the inception of the lease it is reasonably certain that the lessee will exercise the option.

Finance lease liabilities. Where the Company is a lessee in a lease which transfers substantially all the risks and rewards incidental to ownership to the Company, the assets leased are capitalised in property, plant and equipment at the commencement of the lease at the lower of the fair value of the leased asset and the present value of the minimum lease payments. Each lease payment is allocated between the liability and finance charges so as to achieve a constant rate on the finance balance outstanding. The corresponding rental obligations, net of future finance charges, are included in borrowings. The interest cost is charged to profit or loss over the lease period using the effective interest method. The assets acquired under finance leases are depreciated over the shorter of their useful life or the lease term, if the Company is not reasonably certain that it will obtain ownership by the end of the lease term.

k) Intangible assets

The Company's intangible assets primarily include capitalised computer software, patents, trademarks and licences.

Acquired computer software licences, patents and trademarks and other intangibles are capitalised on the basis of the costs incurred to acquire and bring them to use.

Development costs that are directly associated with identifiable and unique software controlled by the Company are recorded as intangible assets if an inflow of incremental economic benefits exceeding costs is probable. Capitalised costs include staff costs of the software development team and an appropriate portion of relevant overheads. All other costs associated with computer software, e.g. its maintenance, are expensed when incurred.

l) Amortisation

Intangible assets are amortised using the straight-line method over their useful lives (unless the agreement or licence conditions state shorter or longer period):

	Useful lives
Software	3 years
Patents, and other licences	1.5 – 6 years
Development costs	6 years
Other intangible assets	6 years

m) Investment in subsidiary

Investment in subsidiary is measured at cost less any impairment loss. The transaction costs are capitalised as part of the cost of the investment. The transaction costs are the costs directly attributable to the acquisition of the investment such as profession fees for legal services, transfer taxes and other acquisition related costs.

The investment is tested for impairment whenever there are indicators that the carrying amount of an investment may not be recoverable. If the recoverable amount of an investment (the higher of its fair value less cost to sell and its value in use) is less than its carrying amount, the carrying amount is reduced to its recoverable amount.

The carrying amount of an investment is derecognised on disposal. The difference between the fair value of the sale proceeds and the disposed share of the carrying amount of the investment is recognised in profit or loss as gain or loss on disposal. The same applies if the disposal results in a step down from subsidiary to joint venture or an associate measured at cost.

n) Emission rights

The Company receives free emission rights as a result of the European Emission Trading Schemes. The rights are received on an annual basis and in return the Company is required to return rights equal to its actual emissions. Therefore, a provision is only recognised when actual emissions exceed the emission rights received free of charge. The emission rights which were granted free of charge are carried at cost, i.e. at zero. When emission rights are purchased from third parties, they are measured at cost and treated as a reimbursement right. When emission rights are acquired by exchange and such an exchange is deemed to have an economic substance, they are measured at fair value as at the date when they become available for use and the difference between the fair value of rights received and cost of assets given up is recognised through profit or loss. The Company did not recognise any provision resulting from gas emissions as at 31 December 2018 and 31 December 2017.

The amounts of emission rights held in zero value by the Company were as follows:

In tons	31 December 2018	31 December 2017
Emission rights	382,601	391,912

o) Impairment of non-financial assets

IIntangible assets not ready to use are not subject to amortisation and are tested annually for impairment. Assets that are subject to depreciation and amortisation are reviewed for impairment whenever events or changes in circumstances indicate that the carrying amount may not be recoverable. An impairment loss is recognised for the amount by which the asset's carrying amount exceeds its recoverable amount. The recoverable amount is the higher of an asset's fair value less costs of disposal and value in use. For the purposes of assessing impairment, assets are grouped at the lowest levels for which there are largely independent cash inflows (cash-generating units). Prior impairments of non-financial assets are reviewed for possible reversal at each reporting date.

p) Assets held for sale

Assets (or disposal groups) are classified as assets held for sale and stated at the lower of their residual amount and fair value less costs to sell if their carrying amount is to be recovered principally through a sale transaction rather than through continuing use. Non-current assets held for sale are not depreciated.

q) Taxes

Income tax

Income taxes have been provided for in the financial statements in accordance with legislation enacted or substantively enacted by the end of the reporting period. The income tax charge/credit comprises current tax and deferred tax and

is recognised in profit or loss for the year, except if it is recognised in other comprehensive income or directly in equity because it relates to transactions that are also recognised, in the same or a different period, in other comprehensive income or directly in equity (for example the effective portion of changes in the fair value of financial derivatives that are designated and qualify as cash flow hedges).

Current tax is the amount expected to be paid to, or recovered from, the taxation authorities in respect of taxable profits or losses for the current and prior periods. Taxable profits or losses are based on estimates if financial statements are authorised prior to filing relevant tax returns. Taxes other than on income are recorded within operating expenses.

Deferred income tax is provided using the balance sheet liability method for tax loss carry forwards and temporary differences arising between the tax bases of assets and liabilities and their carrying amounts for financial reporting purposes. In accordance with the initial recognition exemption, deferred taxes are not recorded for temporary differences on initial recognition of an asset or a liability in a transaction other than a business combination if the transaction, when initially recorded, affects neither accounting nor taxable profit. Deferred tax balances are measured at tax rates (and tax legislation) enacted or substantively enacted at the end of the reporting period, which are expected to apply to the period when the temporary differences will reverse or the tax loss carry forwards will be utilised. Deferred tax assets and liabilities are only offset among the Company's individual entities. Deferred tax assets for deductible temporary differences and tax loss carry forwards are recorded only to the extent that it is probable that future taxable profit will be available against which the deductions can be utilised.

The Company controls the reversal of temporary differences relating to taxes chargeable on dividends from subsidiaries or on gains upon their disposal. The Company does not recognise deferred tax liabilities on such temporary differences except to the extent that management expects the temporary differences to reverse in the foreseeable future.

Value added tax
Output value added tax (VAT) related to sales is payable to tax authorities on the earlier of (a) collection of receivables from customers or (b) delivery of goods or services to customers. Input VAT is generally recoverable against output VAT upon receipt of the VAT invoice. The tax authorities permit the settlement of VAT on a net basis. VAT related to sales and purchases is recognised in the balance sheet on a net basis. Where provision has been made for impairment of receivables, impairment loss is recorded for the gross amount of the debtor, including VAT.

r) Uncertain tax positions
The Company's uncertain tax positions are reassessed by management at the end of each reporting period. Liabilities are recorded for income tax positions that are determined by management as more likely than not to result in additional taxes being levied if the positions were to be challenged by the tax authorities. The assessment is based on the interpretation of tax laws that have been enacted or substantively enacted by the end of the reporting period, and any known court or other rulings on such issues. Liabilities for penalties, interest and taxes other than on income are recognised based on management's best estimate of the expenditure required to settle the obligations at the end of the reporting period.

s) Inventories
Raw materials are mainly spare parts for the gas pipeline system. Purchased inventories are stated at the lower of cost and net realisable amount. Cost includes all costs related with its acquisition (mainly transport costs, customs duty, etc.). The weighted average cost method is applied for disposals of purchased inventories. Net realisable value is the estimated selling price in the ordinary course of business, less the estimated cost of completion and selling expenses. Significant spare parts are recognised and treated as property, plant and equipment.

t) Trade receivables
Trade receivables are carried at their nominal value less expected credit loss.

u) Impairment of financial assets carried at amortised cost
Impairment of financial assets is recognised using a model that is based on expected losses, and is recognised through profit or loss as expected loss on a financial asset over its useful life. The model is based on an estimated allowance

based on historical experience and takes into account the future economic development and performance of business partners.

For 'Trade and other receivables' and 'Loans to related parties', the Company assesses asset impairment based on the 12-month expected loss, unless credit risk significantly increased at the balance sheet date. An increase in credit risk is deemed to be significant if:

- Any portion or instalment is overdue for more than 30 days and the late payment cannot be attributed to a delay caused by the settlement systems;
- The counterparty experiences financial difficulties as evidenced by its financial information that the Company obtains;
- The counterparty is considering a financial reorganisation;
- There is adverse change in the payment status of the counterparty as a result of changes in the national or local economic conditions that impact the counterparty.

In the event of a significant increase of credit risk, the Company assesses the impairment of the asset based on expected loss until the maturity date of the asset.

'Trade and other receivables' and 'Loans to related parties' are considered to be impaired if:

- Any portion or instalment is overdue for more than 90 days and the late payment cannot be attributed to a delay caused by the settlement systems;
- The counterparty experiences financial difficulties as evidenced by its financial information that the Company obtains;
- The counterparty has undergone a financial reorganisation or is insolvent;
- There is adverse change in the payment status of the counterparty as a result of changes in the national or local economic conditions that impact the counterparty.

In respect of financial assets in default, the Company assessed the impairment of the asset based on the expected loss until the maturity date of the asset.

The Company assesses the expected credit loss also on an individual basis – for VNG please refer to Note 4 'Critical Accounting Estimates and Judgements in Applying Accounting Policies'.

The Company does not account for impairment losses if their impact on the financial statements is deemed to be immaterial.

If the terms of an impaired financial asset held at amortised cost are renegotiated or otherwise modified because of financial difficulties of the counterparty, impairment is measured using the original effective interest rate before the modification of terms. The renegotiated asset is then derecognised and a new asset is recognised at its fair value only if the risks and rewards of the asset substantially changed.

This is normally evidenced by a substantial difference between the present values of the original cash flows and the new expected cash flows.

If, in a subsequent period, the amount of the impairment loss decreases, the previously recognised impairment loss is reversed by adjusting the allowance account through profit or loss for the year.

Uncollectible assets are written off against the related impairment loss provision after all the necessary procedures to recover the asset have been completed and the amount of the loss has been determined. Subsequent recoveries of amounts previously written off are credited to impairment loss account within the profit or loss for the year.

v) Deferred expenses and prepayments
Deferred expenses and prepayments are carried at cost less allowances. Deferred expenses and prepayments are classified as non-current when the goods or services relating to them are expected to be obtained after more than one year, or when the deferred expenses relate to an asset which will itself be classified as non-current upon initial recognition. Prepayments to acquire assets are transferred to the carrying

amount of the asset once the Company has obtained control of the asset and it is probable that future economic benefits associated with the asset will flow to the Company. Other prepayments and deferred expenses are written off to profit or loss when the goods or services relating to the prepayments are received. If there is an indication that the assets, goods or services relating to a prepayment will not be received, the carrying value of the prepayment is written down accordingly and a corresponding impairment loss is recognised in profit or loss for the year.

w) Cash and cash equivalents

Cash and cash equivalents include cash in hand, deposits held at call with banks, and other short-term highly liquid investments with original maturities of three months or less from initial recognition. Cash and cash equivalents are carried at amortised cost using the effective interest method.

Cash and cash equivalents are held for the purpose of meeting short-term cash commitments rather than for investment or other purposes. Deposit bills of exchange with original maturity of less than three months from initial recognition are therefore classified as 'Other financial assets'.

x) Dividends

Dividends are recorded as a liability and deducted from equity in the period in which they are declared and approved. Any dividends declared after the reporting period and before the financial statements are authorised for issue are disclosed in Note 35 'Subsequent events'.

y) Advance dividends paid

The Company's decision to pay an advance dividend is reflected in the financial statements as a decrease in equity at the date of the payment and is reported in the 'Retained earnings' balance sheet line.

z) Borrowings

Borrowings are carried at amortised cost using the effective interest method.

At their initial recognition, all bank credits, loans and issued bonds are recorded at their purchase price corresponding to the fair value of the received cash funds, less the costs of obtaining the credit or loan or issue of bonds.

Amortised cost is determined by taking into account the costs of obtaining the credit or loan, as well as the discounts or bonuses received at the settlement of the liability.

The Company designates certain borrowings as hedges of a particular risk associated with a highly probable forecast transaction (cash flow hedge – Note 32, section 'Currency risk').

aa) Government and other grants

Grants from the government and the European Commission are recognised at their fair value where there is a reasonable assurance that the grant will be received and the Company will comply with all attached conditions. Grants relating to the purchase of property, plant and equipment decrease directly the costs of the relevant asset.

bb) Trade and other payables

Trade payables are accrued when the counterparty performs its obligations under the contract and are carried at amortised cost using the effective interest method.

cc) Provisions for liabilities and charges

Provisions for liabilities and charges are non-financial liabilities of uncertain timing or amount. They are accrued when the Company has a present legal or constructive obligation as a result of past events, it is probable that an outflow of resources embodying economic benefits will be required to settle the obligation, and a reliable estimate of the amount of the obligation can be made.

Where there are a number of similar obligations, the probability that an outflow will be required in settlement is determined by considering the class of obligations as a whole.

dd) Financial guarantees

Financial guarantees are irrevocable contracts that require the Company to make specified payments to reimburse the holder of the guarantee for a loss it incurs because a specified debtor fails to make payment when due in accordance with the terms of a debt instrument. Financial guarantees are initially recognised at their fair value, which is normally evidenced by the amount of fees received. When the Company expects to receive recurring future premiums from an issued financial guarantee contract, the guarantee is recorded at

the premium receivable at the inception of the contract and no receivable is recognised in respect of the future premium payments receivable. The premium receivable in one instalment is amortised on a straight line basis over the period covered by that instalment. At the end of each reporting period, the premium receivable in respect of the respective period is measured at its present value and the financial liability is measured at the higher of the remaining unamortised balance and the best estimate of expenditure required to settle the obligation at the end of the reporting period.

ee) Asset retirement obligations

The Company's transmission system is mainly constructed on land owned by third parties. The current legislation requires the Company to bear the costs related to the transmission system's operation and maintenance. The current Czech environmental and energy legislation does not set the obligation to dispose of the assets at the end of their useful life. Given the applicable legislation, management believes that there is no asset retirement obligation (dismantling and removing an item of property, plant and equipment) to be recognised in the financial statements.

ff) Foreign currency translation

The functional currency of the Company is the currency of the primary economic environment in which the Company operates. The functional currency of the Company is Czech Crowns ("CZK") and the Company's presentation currency is also CZK.

Monetary assets and liabilities are translated into Company's functional currency at the official exchange rate of the Czech National Bank ("CNB") at the respective end of the reporting period. Foreign exchange gains and losses resulting from transactions and from the translation of monetary assets and liabilities denominated in foreign currencies into the Company's functional currency at year-end official exchange rates of the CNB are recognised in profit or loss under 'Ne foreign exchange rate gains or losses'. Translation at year-end rates does not apply to non-monetary items that are measured at historical cost. Non-monetary items measured at fair value in a foreign currency, including equity investments, are translated using the exchange rates at the date when the fair value was determined. Effects of exchange rate changes on non-monetary items measured at fair value in a foreign currency are recorded as part of the fair value gain or loss.

gg) Revenue recognition

The Company primarily provides transmission services: cross-border transmission of natural gas via the Czech Republic and domestic transmission of natural gas to partners in the Czech Republic. Auxiliary services to gas infrastructure operators primarily include maintenance and dispatching.

The Company recognises revenues once it has fulfilled (as it fulfils) its supply commitment by transferring the promised goods or service (the "asset") to the customer. The asset is transferred (being transferred) once the customer has gained (as it gains) control over the asset. In determining the transaction price, the Company considers the terms of the contracts and its standard business practice. The transaction price is the amount of consideration to which the Company is, in its view, entitled in exchange for the transfer of the promised goods or service to the customer, with the exception of amounts collected on behalf of third parties. The consideration promised in the contract with the customer may include fixed amounts, variable amounts, or both.

Each contract includes promises to transfer goods or services to a customer that are distinct. These promises are single performance obligations and are therefore accounted for separately and the entire transaction price is allocated to the single performance obligation.

Revenue from gas transmission services is recognised over time based on the reserved capacity as the customer receives control and consumes the benefits provided by the Company's performance as the Company performs. Revenues are usually invoiced on a monthly, quarterly or annual basis and sales are shown net of VAT and discounts. Revenues are measured at the fair value of the consideration received or receivable.

The fee for services determined in the contract with the customer is always specified for each supply (provided service). Revenues from natural gas transmission via the Czech Republic and from domestic gas transmission to partners in the Czech Republic are regulated by the Energy Regulatory Office.

hh) Employee benefits

Wages, salaries, contributions to the Czech state pension and social insurance funds, paid annual leave and sick leave, bonuses, and non-monetary benefits (such as health services and other services) are accrued in the year in which the associated services are rendered by the employees of the Company.

a) Pension obligations

A defined contribution plan is a pension plan under which the Company pays fixed contributions into a separate entity. The Company has no legal or constructive obligations to pay further contributions if the fund does not hold sufficient assets to pay all employees the benefits relating to employee service in the current and prior periods. A defined benefit plan is a pension plan that is not a defined contribution plan.

For defined contribution plans, the Company pays contributions to publicly or privately administered pension insurance plans on a mandatory, contractual or voluntary basis. The Company has no further payment obligations once the contributions have been paid. The contributions are recognised as employee benefit expense when they are due.

b) Termination benefits

Termination benefits are payable when employment is terminated by the Company before the normal retirement date, or whenever an employee accepts voluntary redundancy in exchange for these benefits. The Company recognises termination benefits at the earlier of the following dates: (a) when the Company can no longer withdraw the offer of those benefits; and (b) when the Company recognises costs for a restructuring that is within the scope of IAS 37 and involves the payment of termination benefits. In the case of an offer made to encourage voluntary redundancy, the termination benefits are measured based on the number of employees expected to accept the offer. Benefits falling due more than 12 months after the end of the reporting period are discounted to their present value.

c) Other long term benefits

Long-term employee benefits, such as long-term bonuses, and long service awards are accounted for and measured using the projected unit credit method in the same way as defined benefit pension plan, with the exception that remeasurements (actuarial gains/losses) and related charges are recognised immediately through profit or loss.

ii) Offsetting of financial assets and financial liabilities

Financial assets and liabilities are offset and the net amount reported in the balance sheet only when there is a legally enforceable right to offset the recognised amounts, and there is an intention to either settle on a net basis, or to realise the asset and settle the liability simultaneously. Such a right of set off (a) must not be contingent on a future event and (b) must be legally enforceable in all of the following circumstances: (i) in the normal course of business, (ii) in the event of default and (iii) in the event of insolvency or bankruptcy.

jj) Segment reporting

Operating segments are components that engage in business activities that may earn revenues or incur expenses, whose operating results are regularly reviewed by the chief operating decision maker (CODM) and for which discrete financial information is available. The CODM is the person or group of persons who allocates resources to the operating segments of the Company and assesses its performance. Segments are reported in a manner consistent with the internal reporting provided to the Company's chief operating decision maker. Segments whose revenue, result or assets are ten percent or more of all the segments are reported separately.

4. Critical Accounting Estimates and Judgements in Applying Accounting Policies

The Company makes estimates and assumptions that affect the amounts recognised in the financial statements and the carrying amounts of assets and liabilities within the next financial year. Estimates and judgements are continually evaluated and are based on management's experience and other factors, including expectations of future events that are believed to be reasonable under the circumstances. Management also makes certain judgements, apart from those involving estimations, in the process of applying the accounting policies. Judgements that have the most significant effect on the amounts recognised in the financial statements and estimates that can cause a significant adjustment to the carrying amount of assets and liabilities within the next financial year include:

Functional currency

Management assessed the relevant primary and secondary factors during the consideration about the Company's functional currency. The functional currency is the currency of the primary economic environment, in which the Company operates. The regulated sales prices of the Company are determined by the ERO – the Czech regulatory authority – and are defined in CZK. The majority of the Company's revenue stems from regulated sales. The majority of the Company's operating expenses are incurred in CZK. Capital expenditures are twofold: regular capital expenditure safeguarding the existing system and its operational safety; and large one-off projects. The regular capital expenditure is almost entirely incurred in CZK, while the cost of large one-off projects is incurred in a mixture of currencies (including CZK, EUR and other). Cash from financing activities is generated in a mixture of currencies (including CZK, EUR and USD). Although the Company's operations are influenced by a mixture of currencies, management concluded that the majority of the indicators support CZK as the functional currency of the Company.

Finance lease contract with BRAWA

The Company entered into a long-term finance lease contract in January 2013 whereby it leases the GAZELLE pipeline from its subsidiary BRAWA. The contract is expiring on 1 January 2035.

In January 2013 the Company recognised the finance lease as a leased asset, additionally reporting a finance lease liability in the amount of CZK 7,312 million, which is equal to the fair value of the leased GAZELLE pipeline as the fair value of the leased GAZELLE pipeline was lower than the present value of the minimum lease payments (each determined at the inception of the lease) using a discount rate equal to the market rate.

The minimum lease payments used in the calculation represent the payments over the useful life of the Gazelle pipeline, that the Company is required to make, excluding contingent rent, costs of services and taxes to be paid by and reimbursed to BRAWA, together with any amounts guaranteed by the Company or by a party related to the Company.

The fair value of the leased GAZELLE pipeline used in the calculation represents the carrying amount of the leased GAZELLE pipeline recognised in BRAWA's financial statements and it reflects the amount for which the leased GAZELLE pipeline was exchanged during its construction between the two parties in an arm's length transaction (representing mostly the price for the construction of the leased GAZELLE pipeline tendered with unrelated parties).

Management of the Company estimated the total useful life of the leased GAZELLE pipeline at 70 years, and represents the estimated period, from the commencement of the lease term, without limitation by the lease term, over which the economic benefits embodied in the leased GAZELLE pipeline are expected to be consumed by the Company.

Classification of pipeline capacity contracts with customers

The Company entered into long-term contracts expiring on 1 January 2021 and 1 January 2035 whereby it provided the majority of its GAZELLE pipeline capacity on a 'ship-or-pay' basis. Management considered whether the contract for the provision of pipeline capacity to its major customer is a lease contract (sublease of a finance lease contract with BRAWA described above). Management's conclusion that the contract is not a lease of the pipeline is based on the fact that there is significant (although minority) capacity of the pipeline which is available to other customers and this capacity can be used by the other customers. The pipeline is under the Company's full control and the major customer has no ability or right to control physical access to the pipeline. Therefore, the arrangement is not a lease contract under IFRS. The Company treats the pipeline as part of its property, plant and equipment (recognised under a finance lease) and recognises revenue from the contract with the major customer in accordance with IFRS 15.

Capacity of the Capacity4Gas system

New cross-border capacity was offered and successfully marketed at the annual capacity auction on 6 March 2017. The Company launched the implementation phase of a new project entitled Capacity4Gas. The objective of the project is to build new gas infrastructure within the NET4GAS transmission system. The Capacity4Gas project is executed in two stages, the completion of which is planned for 2019 and

2020. Management considered whether the new contract for the provision of pipeline capacity to its major customer is a lease contract. Management's conclusion that the contract is not a lease of the pipeline is based on the fact that there is significant (although minority) capacity of the pipeline which is available to other customers and this capacity can be used by the other customers. The pipeline is under the Company's full control and the major customer has no ability or right to control physical access to the pipeline. Therefore, the arrangement is not a lease contract under IFRS.

Transmission System Operator licence and gas pipelines
Considering the applicability of IFRIC 12 to the Company, management believes that the requirements for state regulation have not been met as the title will never be transferred to the government nor can the government control the operator's practical ability to sell or pledge the infrastructure and the government is not controlling the construction process. Therefore the Company's system is classified as property, plant and equipment and is not treated as infrastructure used in public-to-private service concession arrangements.

Segments
Operating segments are components that engage in business activities that may earn revenues or incur expenses, whose operating results are regularly reviewed by the chief operating decision maker (CODM) and for which discrete financial information is available. The CODM is the person or group of persons who allocates resources to the operating segments of the Company and assesses its performance. Recurring revenues are generated from contracts with foreign as well as domestic customers. Information for the CODMs (the Company's Statutory Directors) who are responsible for allocating resources and assessing the Company's performance is prepared for the whole Company without any particular structuring. Management regularly obtain information with assessment of the split of revenue between the transit revenue and domestic transmission revenue. There is no profit measure which would be based on similar basis. All profit measures used by the CODMs are based on the results of the Company considered as one business unit. As a result, management consider the whole Company as one segment for the purpose of segment reporting.

Unpaid receivable – Arbitration court
Since October 2016, no monthly fees have been paid under one of the contracts with customers. An arbitration claim was filed on 26 April 2017 and the arbitration procedure is pending. At the financial statements preparation date, the arbitration procedure had yet to be concluded. However, the Company believes it has a solid case and its chance of success is very good. The total unpaid receivable at 31 December 2018 is CZK 235 million (31 December 2017: CZK 129 million), and no allowance has been recognised for it as management believes that the receivable will be fully recovered.

5. Adoption of New or Revised Standards and Interpretations and New Accounting Pronouncements

a) Application of new standards and interpretations effective on or after 1 January 2018

In the current year, the Company has applied new and amended IFRS Standards issued by the International Accounting Standards Board (IASB) and adopted by the EU that are mandatorily effective in EU for an accounting period that begins on or after 1 January 2018.

The following new standards and interpretations that have been issued are obligatory for annual reporting periods beginning on or after 1 January 2018 and that have not been applied by the Company ahead of their effective dates.

The Company first applied IFRS 9 and IFRS 15 from 1 January 2018. Several other standards are effective from 1 January 2018, but they do not have a significant impact on the Company's financial statements.

Since the Company opted for transitional methods for the application of new standards, the comparative information in these financial statements has not been restated to reflect the requirements of the new standards.

IFRS 9 – Financial Instruments (issued in July 2014 and effective for annual periods beginning on or after 1 January 2018)

Impact of the initial application of IFRS 9
Financial Instruments
In the current year, the Company has applied IFRS 9 Financial Instruments (as revised in July 2014) and the related consequential amendments to other IFRS Standards that are effective for annual periods beginning on or after 1 January 2018.

Additionally, the Company adopted consequential amendments to IFRS 7 *Financial Instruments: Disclosures* that were applied to the disclosures for 2018 and to the comparative period.

IFRS 9 introduced new requirements for:

1) The classification and measurement of financial assets and financial liabilities,

2) Impairment of financial assets, and

3) General hedge accounting.

Details of these new requirements as well as their impact on the Company's separate financial statements are described below.

The Company has applied IFRS 9 in accordance with the transitional provisions set out in IFRS 9.

– For the purposes of measurement, financial assets are classified into three categories:
  - Assets measured at amortised cost (AC);
  - Assets measured at fair value through other comprehensive income (FVTOCI); and
  - Assets measured at fair value through profit or loss (FVTPL).

– The classification of financial assets is based on the business model for financial asset management, and whether the contractual cash flows represent solely payments of principal and interest (SPPI). If a debt instrument is held within the business model, whose objective is to collect contractual cash flows until maturity of an instrument, it is measured at amortised cost provided that it meets the SPPI requirement. Financial assets meeting the SPPI requirement and held within the business model whose objective is to both, collect contractual cash flow and sell the asset, it is classified as FVTOCI. Financial assets whose cash flows do not meet the SPPI requirement must be measured at FVTPL (such as derivatives). Embedded derivatives are no longer separated from financial assets but they are included in the assessment of the SPPI criteria.

– The objective of the Company's business model is to hold the financial assets to collect the contractual cash flows (rather than to sell the instrument prior to its contractual maturity to realise its fair value changes).

– IFRS 9 replaces previous categories of IAS 39 – held to maturity, loans and receivables and financial assets available for sale. Pursuant to IFRS 9, derivatives regulated by contracts related to financial assets in the scope of the standard are never separated. A hybrid financial instrument is then classified as a whole.

– Equity instruments are always measured at fair value. However, the management of the Company may make an irrevocable decision (upon initial recognition or upon transition to IFRS 9) to report changes in fair value in other comprehensive income, provided that the instrument is not held for trading. If the investment instrument is intended for trading, changes in fair value are presented in the profit and loss account.

– The majority of IAS 39 requirements for the classification and measurement of financial liabilities were transferred to IFRS 9 without change. The main change will be the Company's obligation to report the impact of changes in the credit risk of financial liabilities measured at fair value, whose change is reported in profit and loss or in other comprehensive income.

– Based on the adoption of IFRS 9, the Company adopted changes concerning the presentation of the financial statements (IAS 1) that require reporting expected credit losses of financial assets on a separate line in profit and loss and other comprehensive income. The Company's previous approach was to include impairment of trade receivables in other expenses.

– As a result, the Company reclassified impairment losses of CZK 0 million as at 31 December 2017. The Company decided not to restate the comparative period.

– Given the nature of the Company's activities, the Transmission Code, the system of issuing and paying advances and the subsequent recognition the application of IFRS 9 does not affect the Company's financial statements. New IFRS 9 classification of financial assets is disclosed in the notes.

– The Company also adopted subsequent changes to IFRS 7 – Financial Instruments. It concerns the method of disclosure applied for 2018.

– IFRS 9 contains a new model of recognising impairment losses – the expected credit loss model (ECL). A three-level approach is available, based on the change in credit quality of financial assets since initial recognition. In practice, the new rules mean that upon the first recognition of financial assets whose value is not credit-impaired (or the expected credit losses during the life of trade receivables without a significant financing component pursuant to IFRS 15; receivables with a significant financing component are subject to the selection of accounting policies – either the simplified or the full method), entities are obliged to recognise the immediate loss in the amount of the 12-month expected credit loss. Where there has been a significant increase in credit risk or a decrease in the value of the financial asset, impairment is measured using lifetime expected credit losses of trade receivables, rather than 12-month expected credit losses. The model includes an operating expedient for leases and trade receivables.

– IFRS 9 gives the option to choose: entities may continue applying hedge accounting requirements pursuant to IAS 39 (refer to Note 6.8A), until the macro hedging project is completed, or they can apply IFRS 9. The Company decided to continue using IAS 39 in the area of hedge accounting for the reporting period beginning on 1 January 2018 and 1 January 2019. The Company is considering transitioning to IFRS 9 in the future.

– The following table and the below notes explain the original measurement categories pursuant to IAS 39 and the new measurement categories pursuant to IFRS 9 for each group of financial assets and financial liabilities of the Company as at 1 January 2018:

	Balance at 1 Jan 2018	
	Measurement as per IAS 39	**Measurement as per IFRS 9**
Trade and other receivables	324	324
Borrowings to related parties	5	5
Other financial assets	683	683
Cash and cash equivalents	625	625
Other non-current payables	13	13
Non-current loans and borrowings	26,988	26,988
Non-current finance lease payable	7,023	7,023
Non-current financial derivatives	835	835
Current loans and borrowings	299	299
Current finance lease payable	198	198
Current trade and other payables	528	528
Financial derivatives	209	209

– Given the nature of the Company's activities and the types of financial instruments it holds, the application of IFRS 9 does not affect the Company's financial statements. New IFRS 9 classification of financial assets is disclosed.

– The Company performed an analysis of the impact of the new model of recognising expected credit losses upon the application of IFRS 9 on the financial statements as at 1 January 2018 which was deemed immaterial and therefore not accounted for.

IFRS 15 – Revenue from Contracts with Customers (issued in May 2014 and effective for reporting periods beginning on or after 1 January 2018)

In the current year, the Company has applied IFRS 15 Revenue from Contracts with Customers (as amended in April 2016) which is effective for an annual period that begins on or after 1 January 2018. IFRS 15 introduced a 5-step approach to revenue recognition. Far more prescriptive guidance has been added in IFRS 15 to deal with specific scenarios.

This new standard introduces the principle that revenue is to be recognised at transaction price at the time when control over the goods or services are transferred to the customer. Any tied products or services that are distinct represent separate performance obligations and revenues for those have to be recognised separately. Discounts or returns on the selling price have to be allocated to the individual performance obligations. If the price is variable for any reason the amount of variable consideration is estimated only to the extent that it is highly probable that a significant reversal in the amount of cumulative revenue recognised will not occur when the uncertainty associated with the variable consideration is subsequently resolved.

Aside from more extensive disclosures of revenue transactions, the application of IFRS 15 does not have a significant impact on the financial situation and/or financial performance of the Company.

Amendment to IFRS 15 – Revenue from Contracts with Customers (issued in April 2016 and effective for reporting periods beginning on or after 1 January 2018)

The amendment does not change the basic principles of the standard, it only clarifies how to identify the performance obligation defined in the contract (promise to supply goods or a service to the customer); how to determine whether the Company acts in the relation as a supplier of goods or services (principal), or only as an intermediary (agent responsible only for mediating the supply of goods or services); and how to determine whether the income from the licence sold should be reported once or accrued over a period of time. The amendment also contains two mitigations to decrease costs in the case of the first application of the new standard. The application of new standards and interpretations effective on or after 1 January 2018.

Aside from more extensive disclosures of revenue transactions, the application of IFRS 15 does not have a significant impact on the financial situation and/or financial performance of the Company.

The following amendments to IFRS standards and interpretations issued by the IASB and adopted by the EU, effective for annual periods beginning or on after 1 January 2018, are also effective for the first time in the current period:

- Amendments to IFRS 2 Classification and Measurement of Share-based Payment Transactions
- Amendments to IAS 40 Transfers of Investment Property
- Amendments to IAS 28 Investments in Associates and Joint Ventures (part of Annual Improvements to IFRSs – cycle 2014–2016)
- IFRIC 22 Foreign Currency Transactions and Advance Consideration

The adoption of these amendments does not have a significant impact on disclosures or the amounts reported in these financial statements.

b) New standards and interpretations effective for reporting periods beginning on or after 1 January 2019

At the date of authorisation of these financial statements, the Company has not applied the following new and revised IFRSs and a new Interpretation that have been issued and adopted by the EU but are not yet effective in the EU:

IFRS 16	*Leases*
Amendments to IFRS 9	*Prepayment Features with Negative Compensation*
IFRIC 23	*Uncertainty over Income Tax Treatments*
Amendments to IAS 28	*Investments in Associates and Joint Ventures – Long-term Interests in Associates and Joint Ventures*

The Company does not expect that the adoption of the new Standards, amendments to the existing Standards and a new Interpretation listed above will have a material impact on the financial statements of the Company in future periods, except as noted below:

IFRS 16 – Leases
(issued in January 2016 and effective for reporting periods beginning on or after 1 January 2019)

This new standard determines new principles for reporting, measurement, presentation and disclosure of leases. IFRS 16 eliminates the classification of operating and finance leases as defined in IAS 17 and instead it provides a comprehensive accounting model for the lessee. Lessees will be required to report: (a) assets and liabilities for all leases longer than 12 months unless the assets are of low value, and (b) depreciation of leased assets separately from interest on lease liabilities in profit and loss. From the perspective of the lessor, IFRS 16 takes over most of the principles of the current standard, IAS 17. The lessor continues to classify operating and finance leases and to recognise these two types of lease separately. The date of first application of IFRS 16 for the Company will be 1 January 2019.

The Company has chosen the full retrospective application of IFRS 16 in accordance with IFRS 16:C5(a). Consequently, the Company will restate the comparative information.

Impact of the new definition of a lease:

- The Company will make use of the practical expedient available on transition to IFRS 16 not to reassess whether a contract is or contains a lease. Accordingly, the definition of a lease in accordance with IAS 17 and IFRIC 4 will continue to apply to those leases entered or modified before 1 January 2019.

- The change in definition of a lease mainly relates to the concept of control. IFRS 16 distinguishes between leases and service contracts on the basis of whether the use of an identified asset is controlled by the customer. Control is considered to exist if the customer has the right to obtain substantially all of the economic benefits from the use of an identified asset and the right to direct the use of that asset. The new definition in IFRS 16 will not significantly impact the scope of contracts that meet the definition of a lease for the Company.

Impact on Lessee Accounting:

Operating leases
IFRS 16 will change how the Company accounts for leases previously classified as operating leases under IAS 17, which were off-balance sheet.

On initial application of IFRS 16, for all leases (except as noted below), the Company will:

a) Recognise right-of-use assets and lease liabilities in the statement of financial position, measured at the present value of the future lease payments;

b) Recognise depreciation of right-of-use assets and interest on lease liabilities in the statement of profit or loss; and

c) Separate the total amount of cash paid into a principal portion (presented within financing activities) and interest (presented within operating activities) in the cash flow statement.

Under IFRS 16, right-of-use assets will be tested for impairment in accordance with IAS 36 Impairment of Assets. This will replace the previous requirement to recognise a provision for onerous lease contracts.

For short-term leases (lease term of 12 months or less) and leases of low-value assets (such as personal computers and office furniture), the Company will opt to recognise a lease expense on a straight-line basis as permitted by IFRS 16.

As at 31 December 2018, the Company has non-cancellable operating lease commitments of CZK 75 million (refer to Note 30).

As at 1 January 2019, the liability reported under IFRS 16 amounts to CZK 294 million (net) and the asset to CZK 246 million.

The lessee elected to apply this Standard in accordance with paragraph C5(b) – the lessee has recognised a right-of-use asset at the date of initial application for leases previously classified as an operating lease applying IAS 17. The lessee has chosen, on a lease-by-lease basis, to measure that right-of-use asset at its carrying amount as if the Standard had been applied since the commencement date, but discounted using the lessee's incremental borrowing rate at the date of initial application.

The Company has applied a modified retrospective method using a single discount rate (2.5%) to a portfolio of leases (leased company cars) and a single discount rate for leased buildings and parking (3.72%) which were assessed as leases with reasonably similar characteristics (similar remaining lease term for a similar class of underlying asset in a similar economic environment) and therefore fulfilled the criteria of IFRS 16.C10(a).

The Company will apply the modified retrospective approach and as a lessee it will not restate comparative figures. The Company will recognise the cumulative effect of initially applying IFRS 16 as an adjustment to the opening balance of retained earnings at the date of initial application (1 January 2019).

Impact on Lessor Accounting:

The Company does not assume the role of a lessor; therefore, no impact on lessor accounting is presented in these financial statements.

c) New Standards and amendments to the existing Standards issued by IASB but not yet adopted by the EU

The following standards and amendments to the existing standards have yet to be adopted for application in the EU:

IFRS 14 – Regulatory Deferral Accounts	The European Commission has decided not to launch the endorsement process of this interim standard and to wait for the final standard.
IFRS 17 – Insurance Contracts	Effective for annual periods beginning or after 1 January 2021.
Amendments to IFRS 3 Business Combinations – Definition of a Business	Effective for annual periods beginning or after 1 January 2020.
Amendments to IFRS 10 Consolidated Financial Statements and IAS 28 Investments in Associates and Joint Ventures – Sales or Contributions of Assets between an Investor and its Associate/Joint Venture	Postponed: awaiting IASB developments.
Amendments to IAS 1 Presentation of Financial Statements and IAS 8 Accounting Policies, Changes in Accounting Estimates and Errors – Definition of Materiality	Effective for annual periods beginning or after 1 January 2020.
Amendments to IAS 19 Employee Benefits – Plan Amendment, Curtailment or Settlement	Effective for annual periods beginning or after 1 January 2019.
Annual improvements to IFRS – Cycle 2015–2017 – Amendments to IFRS 3 Business Combination, IFRS 11 Joint Arrangements, IAS 12 Income Taxes and IAS 23 Borrowing Costs	Effective for annual periods beginning or after 1 January 2019.
Update of references to the Conceptual Framework of IFRS	Effective for annual periods beginning or after 1 January 2020.

The Company's management anticipates that the adoption of these new standards and amendments to the existing standards will have no material impact on the financial statements of the Company in the future reporting periods.

6. Segment Information

(a) Description of products and services from which each reportable segment derives its revenue

The Company is organised on the basis of one main business segment – Natural gas transmission (representing natural gas transmission services).

Revenues from core activities comprise revenues from international transit, domestic transmission and other. In 2018, revenues from international transit represented 83%, revenues from domestic transmission 16% and other revenues 1% of the Company's revenues from core activities.

(b) Factors that management used to identify the reportable segments

Refer to the information in Note 4.

(c) Information about reportable segment profit or loss, assets and liabilities

The Company is considered as one reportable segment. Segment information for the reportable segment for the years ended 31 December 2018 and 31 December 2017 is set out below:

In millions of Czech Crowns	Natural gas transmission	Natural gas transmission
	2018	2017
Revenues from core activities	7,340	7,401
Other operating income	435	437
Finance income	53	4
Total segment income	**7,828**	**7,842**
Raw materials consumed	97	302
Employee benefits	458	439
Depreciation and amortisation	1,884	2,007
Services purchased and lease charges	433	308
Changes in fair value of derivatives, net	(40)	37
Foreign exchange differences, net	(30)	100
Other operating expenses	37	40
Income tax expense	607	527
Finance costs	1,443	1,439
Losses related to the sale of property, plant and equipment	1	–
Segment profit for the year	**2,938**	**2,643**
Segment other comprehensive income for the year	**(414)**	**2,278**
Segment total comprehensive income for the year	**2,524**	**4,921**
Capital expenditures – additions at cost (Note 8, 9)	**1,436**	**771**

In millions of Czech Crowns	Natural gas transmission	Natural gas transmission
	31 December 2018	31 December 2017
Total reportable segment Assets	**54,595**	**51,989**
Total reportable segment Liabilities	**43,164**	**42,767**

Capital expenditure represents additions to non-current assets other than financial instruments and deferred tax assets.

(d) Geographical information

Total revenues for geographical areas for which the revenues are material are reported separately and disclosed below.

The analysis is based on the registered office of shippers (users of the transmission system that is operated by the Company in the Czech Republic).

In millions of Czech Crowns	2018	2017
Czech Republic	1,135	1,570
Other EU countries	1,547	1,297
Non-EU countries	4,658	4,534
Total revenues from core activities	**7,340**	**7,401**

Capital expenditure for each individual country is reported separately as follows:

In millions of Czech Crowns	2018	2017
Czech Republic	1,436	771
Total capital expenditure – additions at cost (Note 8, 9)	**1,436**	**771**

The analysis is based on the location of assets. Capital expenditure represents additions to non-current assets other than financial instruments and deferred tax assets.

(e) Major customers

Revenues from customers that represent 10% or more of the total revenues are as follows:

In millions of Czech Crowns	2018	2017
Customer 1	5,449	4,885
Customer 2	823	1,117
Total revenues from major customers	**6,272**	**6,002**

Revenues comprise only revenues from core activities.

Entities known to the Company as being under common control are considered as a single customer.

7. Balances and Transactions with Related Parties

Parties are generally considered to be related if the parties are under common control or if one party has the ability to control the other party or can exercise significant influence or joint control over the other party in making financial and operational decisions. In considering each possible related party relationship, attention is directed to the substance of the relationship, not merely the legal form.

The Company is fully owned by NET4GAS Holdings and NET4GAS Holdings is the ultimate parent company of the Company.

The Company's balances and transactions with subsidiaries of ultimate parent of Allianz Infrastructure Czech HoldCo II S.à r.l. and subsidiaries of ultimate parent of Borealis Novus Parent B.V. are disclosed below within the category Subsidiaries of joint ventures' ultimate parents.

At 31 December 2018, the outstanding balances with related parties are as follows:

In millions of Czech Crowns	Subsidiary	Immediate parent
Gross value of trade and other receivables		
BRAWA, a.s.	3	–
Loans to related parties (Note 13)		
NET4GAS Holdings, s.r.o.	–	8
Finance lease liability (Note 19)		
BRAWA, a.s. – non-current	6,907	–
– current	197	–
Borrowings (Note 18)		
NET4GAS Holdings, s.r.o.	–	19
BRAWA, a.s. – cash-pooling	62	–

The income and expense items with related parties for the year ended 31 December 2018 are as follows:

In millions of Czech Crowns	Subsidiary	Immediate parent
Purchases / expenses		
BRAWA, a.s. – interest expense from finance lease	483	–
BRAWA, a.s. – interest expense from cash-pooling	3	–
BRAWA, a.s. – services	119	–
Other revenues / gains / received payments		
NET4GAS Holdings, s.r.o. – services	–	1
BRAWA, a.s. – dividends	390	–
BRAWA, a.s. – payment received from decreased capital contributions outside share capital	145	–

The transactions within Company's equity are disclosed in Note 17.

At 31 December 2017, the outstanding balances with related parties were as follows:

In millions of Czech Crowns	Subsidiary	Immediate parent
Loans to related parties (Note 13)		
NET4GAS Holdings, s.r.o.	–	5
Finance lease liability (Note 19)		
BRAWA, a.s. – non-current	7,023	–
– current	198	–
Borrowings (Note 18)		
NET4GAS Holdings, s.r.o.	–	22

The income and expense items with related parties for the year ended 31 December 2017 were as follows:

In millions of Czech Crowns	Subsidiary	Immediate parent
Purchases / expenses		
BRAWA, a.s. – interest expense from finance lease	491	–
BRAWA, a.s. – interest expense from cash-pooling	1	–
BRAWA, a.s. – services	2	–
Other revenues / gains		
NET4GAS Holdings, s.r.o. – interest income	–	2
NET4GAS Holdings, s.r.o. – services	–	1
BRAWA, a.s. – dividends	400	–
BRAWA, a.s. – payment received from decreased capital contributions outside share capital	744	–

At 31 December 2018 and 2017 the Company did not have any other rights and obligations connected to related parties.

Key management compensation is presented below:

	2018		2017	
In millions of Czech Crowns	Expense	Accrued liability	Expense	Accrued liability
Short-term benefits:				
– Salaries	59	4	57	4
– Short-term bonuses	15	15	15	14
Other long-term employee benefits:				
– Long-term bonus scheme	11	35	16	36
– Defined contribution benefits	6	3	5	3
Total	**91**	**57**	**93**	**57**

Short-term bonuses fall due wholly within twelve months after the end of the period in which management rendered the related services.

Key management represents Statutory Directors and managers directly reporting to them.

8. Property, Plant and Equipment

Movements in the carrying amount of property, plant and equipment were as follows:

In millions of Czech Crowns	Freehold Land	Buildings and constructions	Buildings and constructions under finance lease	Plant and equipment	Construction in progress	Total
Carrying amount at 1 January 2017	**183**	**35,392**	**6,894**	**1,096**	**476**	**44,041**
Revaluation	–	–	366	–	–	366
Additions	–	–	–	–	732	732
Capitalised borrowing costs	–	–	–	–	9	9
Transfers	1	279	–	246	(526)	–
Disposals	–	(2)	–	(3)	–	(5)
Depreciation charge	–	(1,628)	(110)	(228)	–	(1,966)
Carrying amount at 31 December 2017	**184**	**34,041**	**7,150**	**1,111**	**691**	**43,177**
Cost at 31 December 2017	184	54,198	7,678	5,951	691	68,702
Accumulated depreciation at 31 December 2017	–	(20,157)	(528)	(4,840)	–	(25,525)
Additions at cost:						
Additions	–	–	–	–	1,397	1,397
Capitalised borrowing costs	–	–	–	–	11	11
Transfers	64	260	–	52	(376)	–
Disposals at cost	(1)	–	–	(8)	–	(9)
Depreciation:						
Accumulated depreciation on disposals	–	–	–	8	–	8
Depreciation charge	–	(1,535)	(110)	(201)	–	(1,846)
Carrying amount at 31 December 2018	**247**	**32,766**	**7,040**	**962**	**1,723**	**42,738**
Cost at 31 December 2018	247	54,458	7,678	5,995	1,723	70,101
Accumulated depreciation at 31 December 2018	–	(21,692)	(638)	(5,033)	–	(27,363)

The capitalisation rate used to determine the amount of borrowing costs to be capitalised is the weighted interest rate applicable to the entity´s general borrowings during the year, was 3.05% in 2018 (2017: 3.09%).

The Company invested (additions of tangible fixed assets – at cost) in 2018 a total of CZK 1,408 million in tangible fixed assets (2017: CZK 741 million). The most significant investment was within the Capacity4Gas project, a total of CZK 997 million (2017: CZK 189 million).

As at 31 December 2018, construction in progress consists mainly of construction of the Capacity4Gas project of CZK 1,343 million and construction of Czech-Polish interconnector gas pipeline of CZK 336 million. Upon completion, the assets are expected to be transferred to buildings and constructions. Other items represent smaller projects.

The Company leases the GAZELLE pipeline under a non-cancellable finance lease agreement. The lease period is 22 years and ownership of the assets rests within the lessor.

9. Intangible Assets

In millions of Czech crowns	Acquired software licences	Development costs	Other	Assets under construction	Total
Carrying amount at 1 January 2017	**55**	**2**	**11**	**21**	**89**
Additions	–	–	–	30	30
Transfers	38	–	2	(40)	–
Amortisation charge	(36)	(2)	(3)	–	(41)
Carrying amount at 31 December 2017	**57**	**–**	**10**	**11**	**78**
Cost at 31 December 2017	496	54	27	11	588
Accumulated amortisation at 31 December 2017	(439)	(54)	(17)	–	(510)
Additions at cost:					
Additions	–	–	–	28	28
Transfers	14	–	–	(14)	–
Disposals at cost	(19)	–	–	–	(19)
Depreciation:					
Accumulated amortisation on disposals	19	–	–	–	19
Amortisation charge	(34)	–	(4)	–	(38)
Carrying amount at 31 December 2018	**37**	**–**	**6**	**25**	**68**
Cost at 31 December 2018	491	54	27	25	597
Accumulated amortisation at 31 December 2018	(454)	(54)	(21)	–	(529)

The Company invested (additions of intangible fixed assets – at cost) a total of CZK 28 million in intangible assets in 2018 (2017: CZK 30 million).

10. Investment in Subsidiary

The Company's interest in its subsidiary as at 31 December 2018 was as follows:

Name	Activity	Carrying amount of the investment (CZK million)	% ownership interest held (% of voting rights if different)	Principal place of business	% ownership interest held	% of voting rights (if different than % ownership interest held)
Subsidiary:						
BRAWA, a.s.	Owner of the GAZELLE natural gas pipeline which is rented to the Company	6,587	100 %	Czech Republic	100 %	100 %
Total		**6,587**				

In December 2018, the Company as the sole shareholder of BRAWA, a.s., decided that a part of other capital contributions out of share capital of CZK 145 million would be paid out to the Company. The transaction was recorded as a decrease in the carrying amount of the investment in BRAWA, a.s.

The Company's interest in its subsidiary as at 31 December 2017 was as follows:

Name	Activity	Carrying amount of the investment (CZK million)	% ownership interest held (% of voting rights if different)	Principal place of business	% ownership interest held	% of voting rights (if different than % ownership interest held)
Subsidiary:						
BRAWA, a.s.	Owner of the GAZELLE natural gas pipeline which is rented to the Company	6,732	100 %	Czech Republic	100 %	100 %
Total		**6,732**				

BRAWA, a.s. with its registered office at Na Hřebenech II 1718/18, Prague – Nusle was incorporated on 27 October 2010. The company was registered in the Commercial Register maintained by the Municipal Court in Prague, section B, insert 16622, on 10 November 2010.

11. Other Non-Current Assets

In millions of Czech Crowns	31 December 2018	31 December 2017
Advances for acquisition of fixed assets	220	25
Total other non-current assets	**220**	**25**

12. Inventories

In millions of Czech Crowns	31 December 2018	31 December 2017
Raw materials	65	61
Total inventories	**65**	**61**

Raw materials are mainly spare parts for the gas transmission system. There are no inventories valued at net realisable value as at 31 December 2018 and 2017.

13. Loans to Related Parties

In millions of Czech Crowns	31 December 2018	31 December 2017
Financial assets measured at amortised costs:		
Corporate loans		
– denominated in USD	1	–
– denominated in Euros	7	5
Total loans provided	**8**	**5**

Loans to related parties as at 31 December 2018 are provided on the basis of the Loan agreement dated 11 November 2013 and are of short-term nature.

Analysis by credit quality of loans outstanding is as follows:

	31 December 2018	31 December 2017
In millions of Czech Crowns	Corporate loans	Corporate loans
Neither past due nor impaired		
– NET4GAS Holdings, s.r.o. – parent company (without external rating)	8	5
Total neither past due nor impaired	**8**	**5**
Total loans provided	**8**	**5**

There are no collaterals related to the above mentioned loans.

Refer to Note 34 for the estimated fair value of each class of loans. Interest rate analysis of loans is disclosed in Note 32 – Interest rate risk. Information on related party transactions is disclosed in Note 7.

14. Trade and Other Receivables

In millions of Czech Crowns	31 December 2018	31 December 2017
Trade and other receivables	705	325
Less expected credit loss	(1)	(1)
Total current trade and other receivables	**704**	**324**

Analysis by credit quality of trade and other receivables is as follows:

In millions of Czech Crowns	31 December 2018 Trade and estimated receivables	31 December 2017 Trade and estimated receivables
Neither past due nor impaired – exposure to		
– Between A- and BBB-*	348	160
– Not rated	114	32
Total neither past due nor impaired	462	192
Past due but not impaired		
– less than 30 days overdue	15	12
– between 30 – 60 days overdue	9	9
– 60 days or more overdue	218	111
Total past due but not impaired**	242	132
Individually determined to be impaired (gross)		
– 360 days or more overdue	1	1
Total individually impaired	1	1
Less impairment provision	(1)	(1)
Total trade and other receivables	**704**	**324**

* Rating disclosed is based on the equivalent credit rating from the third party rating agencies defined in the Network Code approved by ERO (Energy Regulatory Office) which is applicable for the Company.

** Most past due receivables are receivables from one debtor (CZK 235 million) with whom the arbitration procedure is pending. The Company believes that the receivable will be fully paid (Note 4).

15. Other Non-Financial Assets and Other Financial Assets

Other Non-Financial Assets are the following:

In millions of Czech Crowns	31 December 2018	31 December 2017
Value-added tax prepaid	13	–
Prepayments for services	33	32
Accrued revenues	2	–
Total current non-financial assets	**48**	**32**

Other Financial Assets including credit quality are the following:

In millions of Czech Crowns	31 December 2018	31 December 2017
Financial assets measured at amortised cost:		
Deposit bills of exchange with original maturity of less than three months* (A+ to A- rated)	–	300
Deposit bills of exchange with original maturity of less than six months* (A+ to A- rated)	2,787	383
Total other financial assets	**2,787**	**683**

* One month is considered to be equal to 30 days.

16. Cash and Cash Equivalents

In millions of Czech Crowns	31 December 2018	31 December 2017
Bank balances available on demand	1,297	625
Total cash and cash equivalents	**1,297**	**625**

The credit quality of cash and cash equivalents balances may be summarised as follows:

In millions of Czech Crowns	31 December 2018	31 December 2017
Neither past due nor impaired		
– A+ to A- rated	1,186	360
– BBB+ to BBB- rated	111	265
Total	**1,297**	**625**

17. Equity

The Company is a limited liability company. It has no issued share securities. The rights attributed to share in the equity correspond to the proportion in the ownership interest.

Dividends declared and paid during the year were as follows:

In millions of Czech Crowns	2018	2017
Dividends payable at 1 January	–	–
Dividends declared and paid during the year	–	21
Dividends payable at 31 December	–	–

Advance dividends paid during the year were as follows:

In millions of Czech Crowns	2018	2017
Advance dividends paid*	1,500	–
Total advance dividends paid	**1,500**	**–**

* based on the Resolution of the Sole Shareholder of NET4GAS, s.r.o.

All dividends were declared in Czech Crowns and paid in a different currency mix (CZK, EUR and USD).

A description of the nature and purpose of each reserve is provided below the table.

In millions of Czech Crowns	Capital contributions outside registered capital	Cash flow hedges	Total other reserves
Balance as at 1 January 2017	**6,631**	**(1,813)**	**4,818**
Revaluation – hedge accounting	–	2,580	2,580
Reclassification to profit or loss (Revenues) – gross	–	228	228
Reclassification to profit or loss (Finance costs) – gross	–	4	4
Deferred tax effect	–	(534)	(534)
Contribution outside registered capital	(3,267)	–	(3,267)
Balance as at 31 December 2017	**3,364**	**465**	**3,829**
Revaluation – hedge accounting	–	(583)	(583)
Reclassification to profit or loss (Revenues) – gross	–	65	65
Reclassification to profit or loss (Finance costs) – gross	–	6	6
Deferred tax effect	–	98	98
Contribution outside registered capital	1,185	–	1,185
Balance as at 31 December 2018	**4,549**	**51**	**4,600**

Capital contributions outside registered capital
Capital contributions outside registered capital comprises of cash and non-cash capital contributions that do not increase the registered capital.

Increase / decrease in Capital contributions outside registered capital:

Month/Year	In millions of Czech Crowns	Comment to the settlement of the increase/decrease
June 2017	(622)	Netted against receivable from loans incl. interest to NET4GAS Holdings (cash-pooling)
June 2017	(3,000)	Cash payment
November 2017	355	Cash received*
Total decrease in 2017	**(3,267)**	
August 2018	547	Cash received*
November 2018	638	Cash received*
Total increase in 2018	**1,185**	

* For purpose of Capacity4Gas project funding a Funding agreement was concluded based on which the sole shareholder increased other capital funds.

Cash flow hedges
Cash flow hedges are used to recognise gains or losses on hedging instruments that are designated and qualify as cash flow hedges in other comprehensive income, as described in Notes 3c and 32. Amounts are reclassified to profit or loss (line 'Financial expenses'/'Financial income') when the associated hedged transaction affects profit or loss.

18. Borrowings

In millions of Czech Crowns	31 December 2018	31 December 2017
Short-term borrowings from related parties (cash pooling BRAWA)	62	–
Short-term borrowings from related parties (cash pooling NET4GAS Holdings)	19	22
Current portion of bonds and bank borrowings		
– CZK denominated bank borrowings (repayable on 30 May 2022)	25	12
– CZK denominated bond (repayable on 28 January 2021)	80	129
– EUR denominated bond (repayable on 28 July 2021)	66	66
– CZK denominated bond (repayable on 17 July 2025)	30	–
– EUR denominated bond (repayable on 28 July 2026) – issued in 2014	57	56
– EUR denominated bond (repayable on 28 July 2026) – issued in 2015	14	14
Non-current bonds and bank borrowings		
– CZK denominated bank borrowings (repayable on 30 May 2022)	7,065	7,061
– CZK denominated bond (repayable on 28 January 2021)	4,344	6,968
– EUR denominated bond (repayable on 28 July 2021)	7,696	7,627
– CZK denominated bond (repayable on 17 July 2025)	2,627	–
– EUR denominated bond (repayable on 28 July 2026) – issued in 2014	4,092	4,060
– EUR denominated bond (repayable on 28 July 2026) – issued in 2015	1,282	1,272
Total borrowings – current	**353**	**299**
Total borrowings – non-current	**27,106**	**26,988**
Total borrowings	**27,459**	**27,287**

Bank borrowings and bonds
The borrowings as at 31 December 2018 included bank borrowings acquired in 2017 and bonds issued in 2014, 2015 and 2018.

In July 2018 some of CZK bonds due in 2021 were redeemed prematurely and new CZK bonds due in 2025 were issued.

The Company acquired a committed revolving facility agreement in the equivalent of EUR 80 million (CZK 2,058 million per the Czech National Bank's foreign exchange rate as at 31 December 2018). Further, the Company acquired the Overdraft facility in the equivalent of EUR 20 million (CZK 514,5 million per the Czech National Bank's foreign exchange rate as at 31 December 2018). Both facility agreements might be utilised in CZK or EUR. During 2018 the Overdraft facility was drawn and as at 31 December 2018 it was repaid. The Revolving facility agreement was undrawn during 2018 (as at 31 December 2017 the Revolving facility and Overdraft facility were undrawn).

Six banks with different shares participated in the total bank borrowings as at 31 December 2018 (six banks as at 31 December 2017).

There is no collateral related to the above mentioned bank borrowings or bonds.

The Company's senior debts are all issued at pari-passu. The bank borrowings and bonds have no quantitative financial covenants. There are several qualitative covenants applied, i.e. negative pledge, change of control put and loss of finance put. Violation of these covenants can lead to immediate maturity of the debt.

The Company's right to lien its property in favour of another creditor is restricted due to conditions stated in bank and bond financing contracts.

Bank borrowings denominated in foreign currency represent a constituent of hedge accounting, which represents the hedging instrument for securing foreign exchange risk associated with selected future cash flows resulting from natural gas transmission revenues (cash flow hedge) – Notes 3c and 32.

In May 2017 the USD bank borrowing was repaid (was replaced by a new CZK bank borrowing). The cumulative loss in equity (hedge accounting) remained in equity and will be recognised gradually in finance costs (based on effectivity test made at the date of redemption, till March 2030).

Bonds issued:

				In millions of Czech Crowns	
	Issue nominal value	Due date	Annual coupon repayment due date	31 December 2018	31 December 2017
Bond EUR, serial no. 1, ISIN XS1090450047	300,000,000 EUR	28 Jul 2021	Each 28 Jul in arrears	7,762	7,693
Bond EUR, serial no. 2, ISIN XS1090449627	160,000,000 EUR	28 Jul 2026	Each 28 Jul in arrears	4,149	4,116
Bond CZK, serial no. 3, ISIN XS1090620730	7,000,000,000 CZK 4,354,300,000 CZK*	28 Jan 2021	Each 28 Jan in arrears	– 4,424	7,097 –
Bond EUR, serial no. 4, ISIN XS1172113638	50,000,000 EUR	28 Jul 2026	Each 28. Jul in arrears	1,296	1,286
Bond CZK, Domestic, ISIN CZ0003519472	2,643,000,000 CZK	17 Jul 2015	Each 17 Jul in arrears	2,657	–
Total bonds				**20,288**	**20,192**

* As at 17 July 2018 some of the CZK bonds in the amount of CZK 2,645,700,000 were repaid prematurely and therefore the original nominal value of CZK 7,000,000,000 was reduced to CZK 4,354,300,000.

Coupon rates to the above mentioned bonds are in the range of 2.25% – 3.5% p.a. The terms of issue of all the above stated bonds have been approved by the decision of the Central Bank of Ireland (serial no. 1–4) or the Czech National Bank (domestic bond).

The bonds with serial n. 1–3 were accepted for trading on a regulated market of the Irish Stock Exchange PLC on 28 July 2014. The 2015 bonds, serial n. 4, was issued via private placement. Domestic "CZ" bond was accepted for trading on a regulated market of the Prague Stock Exchange on 17 July 2018.

The fair value of borrowings is disclosed in Note 34.

19. Finance Lease Liability

Minimum lease payments under finance leases and their present values are as follows:

In millions of Czech Crowns	Due in 1 year	Due between 1 and 5 years	Due after 5 years	Total
Minimum lease payments at 31 December 2018	593	2,293	18,721	21,607
Less future finance charges	396	1,828	12,279	14,503
Present value of minimum lease payments at 31 December 2018	**197**	**465**	**6,442**	**7,104**
Minimum lease payments at 31 December 2017	601	2,324	19,836	22,761
Less future finance charges	403	1,859	13,278	15,540
Present value of minimum lease payments at 31 December 2017	**198**	**465**	**6,558**	**7,221**

Leased assets with a carrying amount disclosed in Note 8 are effectively pledged for finance lease liabilities as the rights to the leased asset revert to the lessor in the event of default.

20. Government and Other Grants

The Company obtained grants from European Commission for construction projects and deducted the grant value from the carrying amount of the related property, plant and equipment when all conditions attached to the grant were fulfilled.

In millions of Czech Crowns	31 December 2018	31 December 2017
Grants	10	7
Total grants	**10**	**7**

In 2018 the Company complied with all attached conditions and therefore received a grant of CZK 2.7 million for Czech-Polish interconnector gas pipeline project.

21. Other Taxes Payable

In millions of Czech Crowns	31 December 2018	31 December 2017
Other taxes payable within one year comprise:		
Property and other taxes	5	6
Social and health insurance	13	12
Other taxes payable – current	**18**	**18**

22. Provisions for Liabilities and Charges

Movements in provisions are as follows:

	2018		2017	
In millions of Czech Crowns	Current	Non-current	Current	Non-current
Carrying amount at January 1	**2**	**–**	**–**	**167**
Additions charged to profit or loss	–	–	2	–
Unused amounts reversed	(2)	–	–	(167)
Amounts used during the year	–	–	–	–
Carrying amount at December 31	**–**	**–**	**2**	**–**

The non-current provisions as at 1 January 2017 were primarily set aside for restructuring on selected compressor stations. They were expected to be utilised in 2021.

New cross-border capacity was offered and successfully marketed at the annual capacity auction on 6 March 2017 – a result of the joint efforts between the transmission operators in the Federal Republic of Germany and the Slovak Republic and NET4GAS. Based on the results of this auction, The Company is ready to invest into relevant new gas infrastructure in the Czech Republic in the upcoming years. In connection with this construction, the Company made decided to continue the operation of these compressor stations, reassessed their useful lives and released the provision for liquidation and the provision for restructuring – termination payments to employees.

Current provision set aside in 2017 was reassessed and due to the transfer of employees to the new infrastructure project, it was dissolved.

23. Trade and Other Payables

In millions of Czech Crowns	31 December 2018	31 December 2017
Trade payables for purchased property, plant and equipment	175	150
Trade payables – other	42	58
Accrued liabilities for purchased property, plant and equipment	257	53
Accrued liabilities – other	158	118
Received deposits from customers	81	148
Other financial liabilities	1	1
Total financial payables within trade and other payables – current	**714**	**528**
Other payables	10	13
Total financial payables within other payables – non-current	**10**	**13**

24. Accrued Employees Benefits and Other Non-Financial Liabilities

In millions of Czech Crowns	31 December 2018	31 December 2017
Employee benefits		
– Salaries and bonuses	25	25
– Defined contribution costs	56	43
– Untaken holiday costs	11	12
Prepayments received	131	132
Other non-financial liabilities	10	13
Total employee benefits and other non-financial liabilities – current	**233**	**225**

In millions of Czech Crowns	31 December 2018	31 December 2017
Employee benefits – other long-term benefits	105	101
Grant prepayments received (Note 20)	10	7
Total employee benefits and other non-financial liabilities – non-current	**115**	**108**

25. Expenses

In millions of Czech Crowns	2018	2017
Raw materials consumed*	97	302
Salaries	*284*	*296*
Statutory and private pension contribution	*174*	*143*
Employee benefits	458	439
Depreciation and amortisation	1,884	2,007
Repairs and maintenance services	*120*	*141*
Flexibility costs	*–*	*–*
IT & Telecommunications expenses	*89*	*95*
Consultancy and advisory services	*63*	*60*
Lease charges	*65*	*66*
Marketing	*22*	*20*
Other services	*74*	*(74)*
Services purchased and lease charges	433	308
Losses (gains) on disposal of fixed assets	1	–
Losses / (gains) on derivative financial instruments	(40)	37
Foreign exchange differences, net	(30)	100
Other operating expenses	37	40
Total operating expenses	**2,840**	**3,233**

* Represents mainly consumption of natural gas.

26. Other Operating Income

In millions of Czech Crowns	2018	2017
Dividend from subsidiary	390	400
Other operating income	45	37
Total other operating income	**435**	**437**

27. Finance Income

In millions of Czech Crowns	2018	2017
Financial instruments measured at amortised cost:		
■ Interest income on other financial assets	7	3
■ Debt securities – not part of hedging relationship	46	–
Financial instruments measured at FVTPL:		
■ Other finance income	–	1
Total finance income recognised in profit or loss	**53**	**4**

28. Finance Costs

In millions of Czech Crowns	2018	2017
Financial instruments measured at amortised cost:		
■ Interest expense – finance lease	483	491
■ Interest expense – other	633	621
Financial instruments measured at FVTPL:		
■ Finance costs – release of hedge reserve reported in equity*	6	4
■ Net foreign exchange differences on financing activities	234	254
■ Other finance costs	87	69
Total finance costs recognised in profit or loss	**1,443**	**1,439**

* In May 2017, a USD bank loan (hedging instrument) was repaid, the hedge reserve reported in equity remained in equity and it will be gradually charged to finance costs (based on the efficiency tests performed as at the date of initial repayment, until March 2030), hedged item still exists.

29. Income Taxes

(a) Components of income tax expense

Income tax expense / (credit) recorded in profit or loss comprises the following:

In millions of Czech Crowns	2018	2017
Adjustment in respect of current income tax from prior year	3	–
Current income tax payable	803	692
Deferred income tax	(201)	(165)
Income tax expense for the year in the statement of profit and loss	**607**	**527**

(b) Reconciliation between the tax expense and profit or loss multiplied by applicable tax rate

The income tax rate applicable to the majority of the Company's 2018 and 2017 income is 19%. The reconciliation between the expected and the actual tax charge is provided below.

In millions of Czech Crowns	2018	2017
Profit before tax	**3,545**	**3,170**
Theoretical tax charge at statutory rate of 19%:	674	602
Tax effect of items which are not deductible or assessable for income tax purposes:		
– Non-taxable items – Dividend income from subsidiary	(77)	(76)
– Non-deductible items	7	1
Difference between current income tax provision and final current income tax return	3	–
Income tax expense for the year	**607**	**527**

(c) Deferred taxes analysed by type of temporary difference

Differences between IFRS and tax regulation in the Czech Republic give rise to temporary differences between the carrying amounts of assets and liabilities for financial reporting purposes and their tax bases. The tax effect of the movements in these temporary differences is detailed below.

In millions of Czech Crowns	1 January 2018	(Charged) / credited to profit or loss	(Charged) / credited to other comprehensive income	31 December 2018
Tax effect of deductible / (taxable) temporary differences				
Difference between tax and accounting carrying amounts of property, plant and equipment (different tax depreciation)	(6,241)	180	–	(6,061)
Other liabilities; tax deductible in different periods	30	21	–	51
Provisions for liabilities and charges	–	–	–	–
Cash flow hedges	(110)	–	98	(12)
Net deferred tax asset / (liability)	**(6,321)**	**201**	**98**	**(6,022)**

Management estimates that net deferred tax liabilities of CZK 6,022 million (2017: CZK 6,321 million) are recoverable after more than twelve months after the end of the reporting period.

The tax effect of the movements in the temporary differences for the year ended 31 December 2017 were:

In millions of Czech Crowns	1 January 2017	(Charged) / credited to profit or loss	(Charged) / credited to other comprehensive income	31 December 2017
Tax effect of deductible / (taxable) temporary differences				
Difference between tax and accounting carrying amounts of property, plant and equipment (different tax depreciation)	(6,431)	190	–	(6,241)
Other liabilities; tax deductible in different periods	24	6	–	30
Provisions for liabilities and charges	31	(31)	–	–
Cash flow hedges	425	–	(535)	(110)
Net deferred tax asset / (liability)	**(5,951)**	**165**	**(535)**	**(6,321)**

(d) Tax effects in the other comprehensive income

Disclosure of tax effects relating to cash flow hedge reserve (see also Note 17):

	31 December 2018			31 December 2017		
In millions of Czech Crowns	Before tax	Tax effects	After tax	Before tax	Tax effects	After tax
Cash flow hedge	63	(12)	51	575	(110)	465
Other comprehensive income for the period	**63**	**(12)**	**51**	**575**	**(110)**	**465**

30. Contingencies and Commitments

Operating lease commitments in respect of lease agreements for offices Kavčí hory Office Park and car fleet are as follows:

In millions of Czech Crowns	2018	2017
Not later than 1 year	75	73
Total operating lease commitments	**75**	**73**

Capital expenditure commitments. As at 31 December 2018 the Company has contractual capital expenditure commitments in respect of property, plant and equipment totalling CZK 3,277 million (31 December 2017: CZK 477 million) mainly related to project Capacity4Gas of CZK 977 million and Czech-Polish Interconnector gas pipeline of CZK 36 million.

Guarantees. The Company did not recognise any obligations from financial guarantees as at 31 December 2018 and 2017.

Assets pledged and restricted. In connection with the Company's bank borrowings, the Company's right to lien its property in favour of another creditor is restricted.

Compliance with covenants. The Company is subject to certain qualitative covenants related to its borrowings. Non-compliance with such covenants may result in immediate maturity of the debt. The Company was in compliance with covenants at 31 December 2018 and 31 December 2017.

Leased assets with a carrying amount disclosed in Note 8 are effectively pledged for finance lease liabilities in the event of the lessor's failure to fulfil the liability.

Other contingent liabilities. The Company did not recognise any other significant contingent liabilities as at 31 December 2018 and 2017.

31. Derivative Financial Instruments

The table below sets out an aggregate overview of fair values of currencies receivable or payable under financial derivative contracts entered into by the Company. All derivative financial instruments are designated to hedge relationships. The table reflects gross positions before the offsetting of any counterparty positions (and payments) and covers the contracts with settlement dates after the respective end of the reporting period.

Cross currency interest rate swap contracts are long-term while foreign exchange swap and forward contracts are short-term in nature. The respective part of fair value of a hedging derivative is classified as a non-current asset or liability if the remaining maturity of the hedged item is more than 12 months.

The Company did not have any other derivative financial instruments besides cross currency interest rate swaps and foreign exchange forwards as at 31 December 2018.

Cash flow hedge (IFRS 7 requirements for disclosures):

- Changes in value of the hedged item used as a basis for recognising hedge ineffectiveness for the period amount to CZK 609 million (EUR 24 million).
- The balance of the cash flow hedge reserve and the foreign currency translation reserve for continuing hedges amounts to CZK 33 million.
- The balance remaining in the cash flow hedge reserve and the foreign currency translation reserve from hedging relationships for which hedge accounting is no longer applied amounts to CZK 29 million.
- Hedging losses of the reporting period that were recognised in other comprehensive income amount to CZK 512 million
- Hedge ineffectiveness recognised in profit or loss amounts to CZK 0 million.

	31 December 2018			
	Current		Non-Current	
In millions of Czech Crowns	Contracts with positive fair value	Contracts with negative fair value	Contracts with positive fair value	Contracts with negative fair value
Cross currency interest rate swaps: fair values, as at the reporting period, of				
EUR/USD swap				
– USD payable on settlement (-)	–	(502)	–	(11,658)
– EUR receivable on settlement (+)	–	273	–	10,445
EUR/CZK swap				
– CZK payable on settlement (-)	–	(38)	–	(1,549)
– EUR receivable on settlement (+)	–	36	–	1,504
Total USD payable on settlement (-)	–	(502)	–	(11,658)
Total EUR receivable on settlement (+)	–	309	–	11,949
Total CZK payable on settlement (-)	–	(38)	–	(1,549)
Net fair value of cross currency interest rate swaps	**–**	**(231)**	**–**	**(1,258)**

	31 December 2017			
	Current		Non-Current	
In millions of Czech Crowns	Contracts with positive fair value	Contracts with negative fair value	Contracts with positive fair value	Contracts with negative fair value
Cross currency interest rate swaps: fair values, as at the reporting period, of				
EUR/USD swap				
– USD payable on settlement (-)	–	(477)	–	(11,302)
– EUR receivable on settlement (+)	–	271	–	10,530
EUR/CZK swap				
– CZK payable on settlement (-)	–	(39)	–	(1,565)
– EUR receivable on settlement (+)	–	36	–	1,502
Net fair value of cross currency interest rate swaps	**–**	**(209)**	**–**	**(835)**

The Company had two outstanding receivables from foreign exchange forwards in amount of 473 thousand CZK as at 31 December 2018.

	31 December 2018		31 December 2017	
In thousands of Czech Crowns	Contracts with positive fair value	Contracts with negative fair value	Contracts with positive fair value	Contracts with negative fair value
Foreign exchange forwards: fair values, as at the reporting period, of				
– CZK receivable on settlement (+)	100	–	–	–
– EUR payable on settlement (-)	(100)	–	–	–
Net fair value of foreign exchange forwards – current	**–**	**–**	**–**	**–**

Cross currency interest rate swaps and foreign exchange forwards entered into by the Company are generally traded in an over-the-counter market with professional financial institutions on standardised contractual terms and conditions. Aforementioned financial instruments have potentially favourable (assets) or unfavourable (liabilities) conditions as a result of fluctuations in foreign exchange rates, interest rates or other variables relative to their terms. The aggregate fair values of derivative financial assets and liabilities can fluctuate significantly during the life time of derivatives.

Cross currency interest rate swaps
The nominal principal amounts of the outstanding cross currency interest rate swap contracts at 31 December 2018 were EUR 410 million / USD 484 million (2017: EUR 410 million / USD 484 million). All cross currency interest rate swaps have fixed interest rates on both legs. At 31 December 2018, the fixed interest rates vary from 2.50 % to 5.23 % p.a. (as at 31 December 2017: 2.50% to 5.23% p.a.).

The Company designates certain cross currency interest rate swaps, in combination with bonds denominated in EUR, as a hedging instrument of a foreign exchange risk associated with highly probable forecasted cash flows from an issued bond (cash flow hedge – Note 3c and 32, Hedging of currency risk).

All derivatives are measured at FVTPL.

32. Financial Risk Management

The risk management function within the Company is carried out in respect of financial risks, operational risks, market risks and environment risks. Financial risk comprises market risk (including currency risk and interest rate risk), credit risk and liquidity risk. Management sets a strategy for each of the risks, including a limit on open position that may be accepted. The primary objectives of the financial risk management function are to set risk limits and then to ensure that exposure to risks stays within these limits. Monitoring is performed continuously but at least on a monthly basis.

Credit risk. Exposure to credit risk arises as a result of cash and cash equivalents held with banks, loans provided to related parties, billing for sales of services and other transactions with counterparties giving rise to an increase in financial assets.

The Company structures the levels of credit risk it undertakes by placing limits on the amount of risk accepted in relation to counterparties. Limits on the level of credit risk are approved by management. The risks are monitored on a revolving basis and are subject to a monthly review. The Company is exposed to credit concentration risk considering the receivables from financial institutions.

The credit risk is mitigated by advance payments and a system of creditworthiness assessment which is applied to the Company's customers, suppliers of services with potential significant credit position and financial counterparties such as banks or insurance companies. The conditions are incorporated in the Network Code, relevant tender documentations and internal guidelines.

The Company's management reviews the ageing analysis of outstanding trade and other receivables and follows up on past due balances. Other relevant information on ageing and other information about credit risk is disclosed in Note 14 and in Note 16.

Market risks. The Company takes on exposure to market risks. Market risks arise from open positions in (a) foreign currencies and (b) interest bearing assets and liabilities, all of which are exposed to general and specific market movements.

Sensitivities to market risks included below are based on a change in a factor while holding all other factors constant. In practice this is unlikely to occur and changes in some of the factors may be correlated – for example, changes in interest rate and changes in foreign currency rates.

Currency risk. The Company's risk management policy is to hedge the long-term contracted cash flows (mainly revenues from the gas transmission) in each major foreign currency up until 2034.

Management approves the strategy of the currency risk management. The positions are monitored continuously but at minimum on a monthly basis. The amount of risk is evaluated in terms of open positions.

The offsetting of currency positions is applied where possible. When needed the outstanding positions are managed by means of buying or selling the relevant currency in the form of a short term derivative forward or swap contract. The Company reports two outstanding foreign exchange forwards and no outstanding foreign exchange swaps as at 31 December 2018. There were no outstanding positions from foreign exchange forwards or swaps as at 31 December 2017.

The table below summarises the Company's exposure to foreign currency exchange rate risk at the end of the reporting period:

	At 31 December 2018					At 31 December 2017				
In millions of Czech Crowns	Monetary financial assets	Monetary financial liabilities	Derivatives (assets)	Derivatives (liabilities)	Net position	Monetary financial assets	Monetary financial (liabilities)	Derivatives (assets)	Derivatives (liabilities)	Net position
US Dollars	477	1	–	10,868	(10,392)	160	4	–	10,300	(10,144)
Euros	3,062	13,416	10,547	99	94	809	13,149	–	(10,471)	(1,869)
Total exposed to currency risk	**3,539**	**13,417**	**10,547**	**10,967**	**(10,298)**	**969**	**13,153**	**–**	**(171)**	**(12,013)**
Czech Crowns	1,257	21,954	99	1,397	(21,995)	670	21,880	–	1,397	(22,607)
Total	**4,796**	**35,371**	**10,646**	**12,364**	**(32,293)**	**1,639**	**35,033**	**–**	**1,226**	**(34,620)**

As at 31 December 2018 and 2017 the derivatives, i.e. in this case cross currency interest rate swaps and foreign exchange forwards and swaps, were disclosed in their fair value revaluated to Czech Crowns using foreign exchange rate as at 31 December 2018 and 2017. The fair values are disclosed in Note 34.

The above analysis includes only monetary assets and liabilities. Investments in non-monetary assets are not considered to give rise to any currency risk.

Hedging of currency risk. The Company decided to introduce two cash-flow hedges to manage the foreign exchange currency risk in revenues in line with the Company risk management policy. The financial instruments designated as hedging instruments are represented by a) 33 % of bonds maturing in 2021 denominated in EUR and (b) joint hedging instrument of 66 % of bonds maturing in 2021 denominated in EUR and bonds maturing in 2026 denominated in EUR and cross currency interest rate swaps EUR/USD (Note 18, Note 31). The hedged item is represented by contracted or highly probable forecasted natural gas transmission revenues denominated in foreign currencies (in USD and in EUR) that are expected to occur on

a monthly basis up until 2034. Valuation gains and losses from hedging instruments recognised as hedge reserve in equity will be continuously released to profit or loss within finance costs up until the repayment of the hedged item and within revenue up until 2034, which is beyond the repayment date of the hedging instruments (Note 18, Note 31). There was no ineffectiveness to be recorded from cash flow hedges in 2018 and 2017. In May 2017, a bank borrowing denominated in USD was fully repaid and hedge accounting for this instrument ceased to exist.

In 2015, the Company introduced additional, third, cash-flow hedge. The financial instruments designated as hedging instruments are represented by cross currency interest rate swap EUR/CZK (Note 18, Note 31). The hedged item is represented by cash flow related to private placement EUR bond maturing in 2026. Gains and losses recognised in other comprehensive income will be continuously released to profit or loss within finance costs up until 2026 (Note 18, Note 31). There was no ineffectiveness to be recorded from cash flow hedges in 2018 and 2017. In 2018, there were no additional hedges.

The table below analyses the volume of hedged cash flows that were designated as hedged items:

In millions of Czech Crowns	Within 1 year	1–3 years	3–5 years	5–10 years	Over 10 years	Total
31 December 2018						
Currency risk exposure:						
Hedging of future cash flows – future receivables USD	741	1,536	1,871	5,485	1,635	11,268
Hedging of future cash flows – future receivables EUR	691	1,114	–	–	–	1,805
Hedging of future cash flows – future payables EUR	(36)	(72)	(72)	(1,394)	–	(1,574)
TOTAL	**1,396**	**2,578**	**1,799**	**4,091**	**1,635**	**11,499**

In millions of Czech Crowns	Within 1 year	1–3 years	3–5 years	5–10 years	Over 10 years	Total
31 December 2017						
Currency risk exposure:						
Hedging of future cash flows – future receivables USD	1,069	1,405	1,642	4,883	1,031	10,030
Hedging of future cash flows – future receivables EUR	566	1,404	417	–	–	2,387
Hedging of future cash flows – future payables EUR	(36)	(72)	(72)	(1,419)	–	(1,599)
TOTAL	**1,599**	**2,737**	**1,987**	**3,464**	**1,031**	**10,818**

The amount of reclassified other comprehensive income to revenues during 2018 decreased revenues by CZK 65 million (2017: decreased revenues by CZK 228 million). The amount of reclassified other comprehensive income to financial costs during 2018 increased financial costs by CZK 6 million (2017: increased financial costs by CZK 4 million).

The following table presents sensitivities stress test of profit or loss or equity (cash flow hedge) to changes in exchange rates applied at the end of the reporting period relative to the functional currency, with all other variables held constant:

	At 31 December 2018		At 31 December 2017	
In millions of Czech Crowns	Impact on profit or loss	Impact on equity	Impact on profit or loss	Impact on equity
US Dollar strengthening by 10%	47	(1,217)	16	(995)
US Dollar weakening by 10%	(47)	1,217	(16)	995
Euro strengthening by 10%	208	(13)	76	(62)
Euro weakening by 10%	(208)	13	(76)	62

The exposure was calculated only for monetary balances denominated in currencies other than the functional currency of the Company and for currency sensitive derivatives.

The Company's exposure to currency risk with impact to profit or loss as at 31 December 2018 is influenced by (i) cash balances held in foreign currency, (ii) by existing loans to related parties provided in EUR (Note 13, Note 27 and Note 28) and (iii) outstanding payables and receivables.

Interest rate risk. The Company's bank borrowings are contracted at floating interest rates. Some instruments, like bonds and fix-to-fix cross currency interest rate swaps, are priced at fixed rates and are exposed to re-pricing risk at maturity. The fair value is (among other factors) also sensitive to interest rates through the discounted cash flow model which is used for the valuation (see Note 34a).

The table below summarises the Company's exposure to interest rate risks (e.g. term deposits; bonds and borrowings from related parties on a fixed rate, both with re-pricing risk). The table presents the aggregated amounts of the Company's financial assets and liabilities at carrying amounts, categorised by the earlier of contractual interest re-pricing or maturity dates.

In millions of Czech Crowns	On demand and to 3 months	From 3 months to 12 months	From 12 months to 5 years	Over 5 years	Total
31 December 2018					
Financial assets – floating rate	1,297	–	–	–	1,297
Financial assets – fixed rate with re-pricing risk	2,787	–	–	–	2,787
Financial liabilities – floating rate	(7,171)	–	–	–	(7,171)
Financial liabilities – fixed rate with re-pricing risk	–	–	(12,186)	(8,102)	(20,288)
Financial liabilities – fixed rate with re-pricing risk – finance lease	(49)	(148)	(465)	(6,442)	(7,104)
Net interest sensitivity gap at 31 December 2018	**(3,136)**	**(148)**	**(12,651)**	**(14,544)**	**(30,479)**
31 December 2017					
Financial assets – floating rate	631	–	–	–	631
Financial assets – fixed rate with re-pricing risk	300	383	–	–	683
Financial liabilities – floating rate	(7,095)	–	–	–	(7,095)
Financial liabilities – fixed rate with re-pricing risk	–	–	(14,790)	(5,403)	(20,193)
Financial liabilities – fixed rate with re-pricing risk – finance lease	(50)	(148)	(465)	(6,558)	(7,221)
Net interest sensitivity gap at 31 December 2017	**(6,214)**	**235**	**(15,255)**	**(11,961)**	**(33,195)**

As the Company's bank assets and liabilities (borrowings) are directly exposed to the floating interest rate, the change in interest rates has an impact on the Company's profit or loss for the current year.

The following table presents sensitivities of profit or loss to reasonably possible changes in short term interest rates applied at the end of the reporting period, with all other variables held constant:

	At 31 December 2018
In millions of Czech Crowns	Impact on profit or loss
1M CZK PRIBOR increase by 25 bps	(15)
1M CZK PRIBOR decrease by 25 bps	15
1M EURIBOR increase by 25 bps	7
1M EURIBOR decrease by 25 bps	(7)
1M USD LIBOR increase by 25 bps	1
1M USD LIBOR decrease by 25 bps	(1)

In millions of Czech Crowns	At 31 December 2017 Impact on profit or loss
1M CZK PRIBOR increase by 25 bps	(18)
1M CZK PRIBOR decrease by 25 bps	18
1M EURIBOR increase by 25 bps	–
1M EURIBOR decrease by 25 bps	–
1M USD LIBOR increase by 25 bps	–
1M USD LIBOR decrease by 25 bps	–

The Company interest rate risk management policy requires that at least 70% of the interest rate exposure arising from bonds and term loans are at a fixed rate. The existing financing structure achieves this requirement.

The Company's exposure to interest rate risk as at 31 December 2018 and 2017 is representative of the typical exposure during the year, starting from July 2014.

The Company monitors interest rates for its financial instruments. The table below summarises effective interest rates at the respective end of the reporting period based on reports reviewed by key management personnel. Increase in CZK effective interest rates in 2018 is caused by increased CZK base rates and refinancing of CZK 2021 bond – Note 18.

	31 December 2018			31 December 2017		
In % p.a.	CZK	USD	EUR	CZK	USD	EUR
Assets						
Cash and cash equivalents	1.38	0.90	0.10	0.08	0.00	0.00
Loans to related parties	n/a	3.08	0.33	n/a	n/a	0.32
Liabilities						
Borrowings	2.53	n/a	3.00	1.89	n/a	3.00
Finance lease liability	4.78	n/a	n/a	5.29	n/a	n/a

Liquidity risk. Liquidity risk is the risk that a Company will encounter difficulty in meeting obligations associated with financial liabilities. The Company is exposed to daily calls on its available cash resources. Liquidity risk is managed by Treasury department of the Company and monitored in terms of monthly (one month forward), short-term (one year forward) and long-term (five years forward) forecasts. Management monitors short-term forecasts of the Company's cash flows provided on a monthly basis.

The Company has such a liquidity position that is able to secure its operating funding needs through the cash collected from the business operations continuously throughout the year. The Company's liquidity portfolio comprises cash and cash equivalents (Note 16) and bank term deposits and deposit bills. Management estimates that the liquidity portfolio can be realised in cash within a few days in order to meet unforeseen liquidity requirements.

The tables below show liabilities at 31 December 2018 and 2017 by their remaining contractual maturity. The amounts disclosed in the table below are the contractual undiscounted cash flows and gross loan commitments. Such undiscounted cash flows differ from the amount included in the balance sheet because the balance sheet amount is based on discounted cash

flows. Financial derivatives are included at the contractual amounts to be paid or received, unless the Company expects to close the derivative position before its maturity date in which case the derivatives are included based on the expected cash flows.

When the amount payable is not fixed, the amount disclosed is determined by reference to the conditions existing at the end of the reporting period. Foreign currency payments are translated using the spot exchange rate at the end of the reporting period.

The maturity analysis of financial liabilities at 31 December 2018 is as follows:

In millions of Czech Crowns	Demand and to 3 months	From 3 months to 12 months	From 12 months to 5 years	Over 5 years	Total
Liabilities					
Bank borrowings, bonds and borrowings from related parties (Note 18)	221	583	21,293	8,731	30,828
Finance lease liability (Note 19)	149	444	2,293	18,721	21,607
Trade and other payables (Note 23)	714	–	10	–	724
Gross settled cross currency interest rate swaps (Note 31)					
– inflows	–	(309)	(6,123)	(5,942)	(12,374)
– outflows	–	548	7,727	7,114	15,389
Total future payments, including future principal and interest payments	**1,084**	**1,266**	**25,200**	**28,624**	**56,174**

The maturity analysis of financial liabilities at 31 December 2017 is as follows:

In millions of Czech Crowns	Demand and to 3 months	From 3 months to 12 months	From 12 months to 5 years	Over 5 years	Total
Liabilities					
Bank borrowings, bonds and borrowings from related parties (Note 18)	180	461	23,824	6,079	30,544
Finance lease liability (Note 19)	151	450	2,885	19,275	22,761
Trade and other payables (Note 23)	528	–	13	–	541
Gross settled cross currency interest rate swaps (Note 31)					
–inflows	–	(306)	(6,206)	(6,079)	(12,591)
–outflows	–	522	7,571	7,103	15,196
Total future payments, including future principal and interest payments	**859**	**1,127**	**28,087**	**26,378**	**56,451**

The net current liquidity position calculated as the difference between current assets and current liabilities at 31 December 2018 is a net current receivable of CZK 3,236 million (31 December 2017 a net current receivable: CZK 498 million).

Payments in respect of cross-currency interest rate swaps will be accompanied by related cash inflows.

33. Management of Capital

The Company's objectives when managing capital are to safeguard the Company's ability to continue as a going concern in order to provide returns for shareholders and benefits for other stakeholders. The Company manages its capital ratios to ensure a strong credit rating (e.g. the Company may adjust the amount of dividends paid to shareholders in order to maintain or adjust the capital structure).

According to the Company's policy, capital structure consists mainly of equity, non-subordinated borrowings from banks, non-subordinated bonds and non-subordinated short-term borrowings from related parties.

In millions of Czech Crowns	At 31 December 2018	At 31 December 2017
Equity	11,431	9,222
Non-subordinated borrowings from banks and bonds	27,378	27,265
Non-subordinated short-term borrowings from related parties	81	22
Total	**38,890**	**36,509**

The Company has complied with all covenants arising from the borrowings as at 31 December 2018 and 2017.

34. Fair Value of Financial Instruments

Fair value measurements are analysed by level in the fair value hierarchy. Management applies judgement in categorising financial instruments using the fair value hierarchy. If a fair value measurement uses observable inputs that require significant adjustment, that measurement is a Level 3 measurement. The significance of a valuation input is assessed against the fair value measurement in its entirety.

(a) Recurring fair value measurements
Recurring fair value measurements are those that the accounting standards require or permit in the balance sheet at the end of each reporting period.

(b) Financial instruments carried at fair value
Only derivatives are measured at fair value.

All recurring fair value measurements are categorised in the fair value hierarchy into level 2 as at 31 December 2018 and 2017.

There have been no changes in the valuation technique for level 2 since 31 December 2017.

The description of valuation technique and description of inputs used in the fair value measurement for level 2 measurements at 31 December 2018:

In millions of Czech Crowns	Fair value	Valuation technique	Inputs used
Derivative financial instruments			
Cross currency interest rate swap contracts	1,489	Discounted cash flow method	Czech National Bank foreign exchange rates, inter-bank swap rates
Currency forward contracts	–	Discounted cash flow method	Czech National Bank foreign exchange rates, inter-bank swap rates
TOTAL RECURRING FAIR VALUE MEASUREMENTS AT LEVEL 2	**1,489**	**–**	**–**

The description of valuation technique and description of inputs used in the fair value measurement for level 2 measurements at 31 December 2017:

In millions of Czech Crowns	Fair value	Valuation technique	Inputs used
Derivative financial instruments			
Cross currency interest rate swap contracts	(1,044)	Discounted cash flow method	Czech National Bank foreign exchange rates, inter-bank swap rates
Currency forward contracts	n/a	n/a	n/a
TOTAL RECURRING FAIR VALUE MEASUREMENTS AT LEVEL 2	**(1,044)**	**–**	**–**

The following table presents movements in fair values of derivative financial instruments:

In millions of Czech Crowns	2018	2017
Opening balance	**(1,044)**	**(2,770)**
Change in fair value of contracts concluded and realised during the period	30	(37)
Settlement of contracts concluded and realised during the period	(30)	37
Change in unrealised gains or losses for the period included in other comprehensive income for contracts held at the end of the reporting period	(445)	1,726
Closing balance	**(1,489)**	**(1,044)**

(c) Non-recurring fair value measurements
There are no assets held for sale or other items with non-recurring fair value measurements as at 31 December 2018 and 31 December 2017.

(d) Financial assets and liabilities not measured at fair value but for which fair value is disclosed

Fair values analysed by level in the fair value hierarchy and carrying value of assets and liabilities not measured at fair value are as follows:

	31 December 2018				31 December 2017			
In millions of Czech Crowns	Level 1	Level 2	Level 3	Carrying value	Level 1	Level 2	Level 3	Carrying value
ASSETS								
Other financial assets								
– Loans to related parties	–	–	8	8	–	–	5	5
Total ASSETS	**–**	**–**	**8**	**8**	**–**	**–**	**5**	**5**
LIABILITIES								
Borrowings								
– Borrowings from related parties – current – BRAWA	–	–	62	62	–	–	–	–
– Borrowings from related parties – current – NET4GAS Holdings	–	–	19	19	–	–	22	22
– Bank borrowings	–	–	7,104	7,090	–	–	7,122	7,073
– Bonds	19,826	–	1,342	20,288	20,357	–	1,388	20,192
Finance lease liability								
– Finance lease from BRAWA	–	–	9,001	7,104	–	–	8,545	7,221
TOTAL LIABILITIES	**19,826**	**–**	**17,528**	**34,563**	**20,357**	**–**	**17,077**	**34,508**

Trade and other receivables' carrying values approximate to their fair values.

The fair values in level 1 of fair value hierarchy reflects the price of fixed interest rate bonds listed in active markets in public stock exchanges.

The fair values in level 3 of fair value hierarchy were estimated using the discounted cash flows valuation technique. Inputs used for loans to related parties are market observable (PRIBOR, LIBOR, EURIBOR) adjusted by unobservable estimated credit spreads. Inputs used for bank borrowings, borrowings from related parties and financial leases are market observable (PRIBOR, LIBOR, EURIBOR and IRS) adjusted by unobservable estimated credit spreads.

The fair value of unquoted bonds was determined based on estimated future cash flows expected to be received, discounted by market observable yield curve adjusted by unobservable estimated credit spread.

Financial assets measured at amortised cost. The estimated fair value of asset instruments is based on estimated future cash flows expected to be received, discounted at current interest rates for new instruments with similar credit risk and remaining maturity.

Financial liabilities measured at amortised cost. The estimated fair value of liability instruments is based on expected cash flows discounted at current interest rates for new instruments with similar credit risk and remaining maturity.

35. Subsequent Events

No events have occurred subsequent to year-end that would have a material impact on the separate financial statements for the year ended 31 December 2018.

Signature of the members of the statutory body of the Company:

11 March 2019

Andreas Rau
Statutory Director

Radek Benčík
Statutory Director

Václav Hrach
Statutory Director

The General Meeting approved the separate financial statements for publication on 12 April 2019.

ANNEX NO. 3:

Deloitte.

INDEPENDENT AUDITOR'S REPORT
To the Partner of NET4GAS, s.r.o.

Having its registered office at: Na Hřebenech II 1718/8, 140 21 Praha 4 - Nusle

Report on the Audit of the Separate and Consolidated Financial Statements

Opinion

We have audited the accompanying separate financial statements of NET4GAS, s.r.o. (hereinafter also the "Company") prepared on the basis of International Financial Reporting Standards as adopted by the EU, which comprise the balance sheet as at 31 December 2018, and the statement of profit or loss and other comprehensive income, statement of changes in equity and statement of cash flows for the year then ended, and notes to the financial statements, including a summary of significant accounting policies and other explanatory information.

We have also audited the accompanying consolidated financial statements of NET4GAS, s.r.o and its subsidiary (the "Group") prepared on the basis of International Financial Reporting Standards as adopted by the EU, which comprise the consolidated balance sheet as at 31 December 2018, and the consolidated statement of profit or loss and other comprehensive income, consolidated statement of changes in equity and consolidated statement of cash flows for the year then ended, and notes to the consolidated financial statements, including a summary of significant accounting policies and other explanatory information.

In our opinion:

- The accompanying separate financial statements give a true and fair view of the financial position of NET4GAS, s.r.o. as at 31 December 2018, and of its financial performance and its cash flows for the year then ended in accordance with International Financial Reporting Standards as adopted by the EU.

- The accompanying consolidated financial statements give a true and fair view of the consolidated financial position of the Group as at 31 December 2018, and of its consolidated financial performance and its consolidated cash flows for the year then ended in accordance with International Financial Reporting Standards as adopted by the EU.

Basis for Opinion

We conducted our audit in accordance with the Act on Auditors and Auditing Standards of the Chamber of Auditors of the Czech Republic, which are International Standards on Auditing (ISAs), as amended by the related application guidelines. Our responsibilities under this law and regulation are further described in the Auditor's Responsibilities for the Audit of the Financial Statements section of our report. We are independent of the Company and the Group in accordance with the Act on Auditors and the Code of Ethics adopted by the Chamber of Auditors of the Czech Republic and we have fulfilled our other ethical responsibilities in accordance with these requirements. We believe that the audit evidence we have obtained is sufficient and appropriate to provide a basis for our opinion.

Other Information in the Consolidated Annual Report

In compliance with Section 2(b) of the Act on Auditors, the other information comprises the information included in the Consolidated Annual Report other than the separate or consolidated financial statements and auditor's report thereon. The Statutory Executives are responsible for the other information.

Our opinion on the separate and consolidated financial statements does not cover the other information. In connection with our audit of the separate and consolidated financial statements, our responsibility is to read the other information and, in doing so, consider whether the other information is materially inconsistent with the separate and consolidated financial statements or our knowledge obtained in the audit or otherwise appears to be materially misstated. In addition, we assess whether the other information has been prepared, in all material respects, in accordance with applicable law or regulation, in particular, whether the other information complies with law or regulation in terms of formal requirements and procedure for preparing the other information in the context of materiality, i.e. whether any non-compliance with these requirements could influence judgments made on the basis of the other information.

Based on the procedures performed, to the extent we are able to assess it, we report that:

- The other information describing the facts that are also presented in the separate and consolidated financial statements is, in all material respects, consistent with the separate and consolidated financial statements; and
- The other information is prepared in compliance with applicable law or regulation.

In addition, our responsibility is to report, based on the knowledge and understanding of the Company and the Group obtained in the audit, on whether the other information contains any material misstatement of fact. Based on the procedures we have performed on the other information obtained, we have not identified any material misstatement of fact.

Other Matter

The separate and consolidated financial statements of NET4GAS, s.r.o. for the year ended 31 December 2017 were audited by another auditor who expressed an unmodified opinion on those statements on 14 March 2018.

Key Audit Matters

Key audit matters are those matters that, in our professional judgment, were of most significance in our audit of the separate and consolidated financial statements of the current period. These matters were addressed in the context of our audit of the financial statements as a whole, and in forming our opinion thereon, and we do not provide a separate opinion on these matters.

Key Audit Matter	How it was addressed
Capitalisation of tangible fixed assets	
The Company/Group continues with an investment programme for the transmission system. The most significant expenditures relate to the Capacity4Gas project that started in 2017. The capital expenditure of the Company/Group amounted to CZK 1,377 million / CZK 1,379 million during 2018 (2017: CZK 713 million / CZK 732 million), as disclosed in the cash flow statements. The significant level of capital expenditure requires consideration of the nature of costs incurred to ensure that tangible assets meet the specific recognition criteria stated in IAS 16 Property Plant and Equipment (IAS 16), and the application of the technical experts' judgement in assigning appropriate useful economic lives. As a result, this was determined to be a key audit matter.	Our audit procedures included assessing internal controls designed for capitalisation of assets and appropriateness of the Company's/Group's judgement regarding useful economic lives. Our audit procedures focused on assessing the nature of tangible fixed assets capitalised by the Company/Group to test the validity of amounts capitalised and evaluation of whether assets meet the recognition criteria set out in IAS 16. We performed our tests on the selected sample. Our audit work considered whether the capitalisation of assets ceased when the assets are in the location and condition necessary for them to be capable of operating in the manner intended by the Company/Group and, whether their depreciation or amortisation was systematically allocated over the useful life of the assets. Furthermore, we considered if the useful economic lives assigned are reasonable and are based on the historical experience of usage of such tangible assets. The capitalisation of assets was assessed to be appropriate. We concluded that the useful economic lives assigned to newly capitalised assets are appropriate based on evidence obtained.

Responsibilities of the Company's Statutory Executives, Supervisory Board and Audit Committee for the Financial Statements

The Statutory Executives are responsible for the preparation and fair presentation of the separate and consolidated financial statements in accordance International Financial Reporting Standards as adopted by the EU and for such internal control as the Statutory Executives determine is necessary to enable the preparation of financial statements that are free from material misstatement, whether due to fraud or error.

In preparing the separate and consolidated financial statements, the Statutory Executives are responsible for assessing the Company's ability to continue as a going concern, disclosing, as applicable, matters related to going concern and using the going concern basis of accounting unless the Statutory Executives either intend to liquidate the Company or the Group or to cease operations, or have no realistic alternative but to do so.

The Supervisory Board and Audit Committee and responsible for overseeing the Company's and Group's financial reporting process.

Auditor's Responsibilities for the Audit of the Financial Statements

Our objectives are to obtain reasonable assurance about whether the financial statements as a whole are free from material misstatement, whether due to fraud or error, and to issue an auditor's report that includes our opinion. Reasonable assurance is a high level of assurance, but is not a guarantee that an audit conducted in accordance with ISAs will always detect a material misstatement when it exists. Misstatements can arise from fraud or error and are considered material if, individually or in the aggregate, they could reasonably be expected to influence the economic decisions of users taken on the basis of these financial statements.

As part of an audit in accordance with the above law or regulation, we exercise professional judgment and maintain professional skepticism throughout the audit. We also:

- Identify and assess the risks of material misstatement of the separate and consolidated financial statements, whether due to fraud or error, design and perform audit procedures responsive to those risks, and obtain audit evidence that is sufficient and appropriate to provide a basis for our opinion. The risk of not detecting a material misstatement resulting from fraud is higher than for one resulting from error, as fraud may involve collusion, forgery, intentional omissions, misrepresentations, or the override of internal control.
- Obtain an understanding of internal control relevant to the audit in order to design audit procedures that are appropriate in the circumstances, but not for the purpose of expressing an opinion on the effectiveness of the Company's or Group's internal control.
- Evaluate the appropriateness of accounting policies used and the reasonableness of accounting estimates and related disclosures made by the Statutory Executives.
- Conclude on the appropriateness of the Statutory Executives' use of the going concern basis of accounting and, based on the audit evidence obtained, whether a material uncertainty exists related to events or conditions that may cast significant doubt on the Company's or Group's ability to continue as a going concern. If we conclude that a material uncertainty exists, we are required to draw attention in our auditor's report to the related disclosures in the separate or consolidated financial statements or, if such disclosures are inadequate, to modify our opinion. Our conclusions are based on the audit evidence obtained up to the date of our auditor's report. However, future events or conditions may cause the Company or the Group to cease to continue as a going concern.
- Evaluate the overall presentation, structure and content of the separate or consolidated financial statements, including the disclosures, and whether the separate or consolidated financial statements represent the underlying transactions and events in a manner that achieves fair presentation.
- Obtain sufficient appropriate audit evidence regarding the financial information of the entities or business activities within the Group to express an opinion on the consolidated financial statements. We are responsible for the direction, supervision and performance of the group audit. We remain solely responsible for our audit opinion.

We communicate with the Statutory Executives, the Supervisory Board and the Audit Committee regarding, among other matters, the planned scope and timing of the audit and significant audit findings, including any significant deficiencies in internal control that we identify during our audit.

We also provide the Audit Committee with a statement that we have complied with relevant ethical requirements regarding independence, and to communicate with them all relationships and other matters that may reasonably be thought to bear on our independence, and where applicable, related safeguards.

From the matters communicated with the Statutory Executives, the Supervisory Board and the Audit Committee, we determine those matters that were of most significance in the audit of the financial statements of the current period and are therefore the key audit matters. We describe these matters in our auditor's report unless law or regulation precludes public disclosure about the matter or when, in extremely rare circumstances, we determine that a matter should not be communicated in our report because the adverse consequences of doing so would reasonably be expected to outweigh the public interest benefits of such communication.

Report on Other Legal and Regulatory Requirements

In compliance with Article 10(2) of Regulation (EU) No. 537/2014 of the European Parliament and the Council, we provide the following information in our independent auditor's report, which is required in addition to the requirements of International Standards on Auditing:

Appointment of the Auditor and the Period of Engagement

We were appointed as the auditors of the Company by the General Meeting of Shareholders on 1 August 2018 and our uninterrupted engagement has lasted for one year.

Consistence with the Additional Report to the Audit Committee

We confirm that our audit opinion on the financial statements expressed herein is consistent with the additional report to the Audit Committee of the Company, which we issued on 11 March 2019 in accordance with Article 11 of Regulation (EU) No. 537/2014 of the European Parliament and the Council.

Provision of Non-audit Services

We declare that no prohibited non-audit services referred to in Article 5 of Regulation (EU) No. 537/2014 of the European Parliament and the Council were provided. In addition, there are no other non-audit services which were provided by us to the Company and its controlled undertakings and which have not been disclosed in the financial statements.

In Prague on 11 March 2019

Audit firm:	Statutory auditor:
Deloitte Audit s.r.o. registration no. 079	Václav Loubek registration no. 2037

ID No.: 27260364
A PDF version of the NET4GAS Group Consolidated Annual Report 2018 is available on the NET4GAS website in Czech and in English. In all matters of interpretation, the Czech version of the annual report takes precedence over the English version.

Design, DTP and production: Heyduk, Musil & Strnad, s.r.o.
Photography: Ronald Hilmar st., iStock by Getty Images

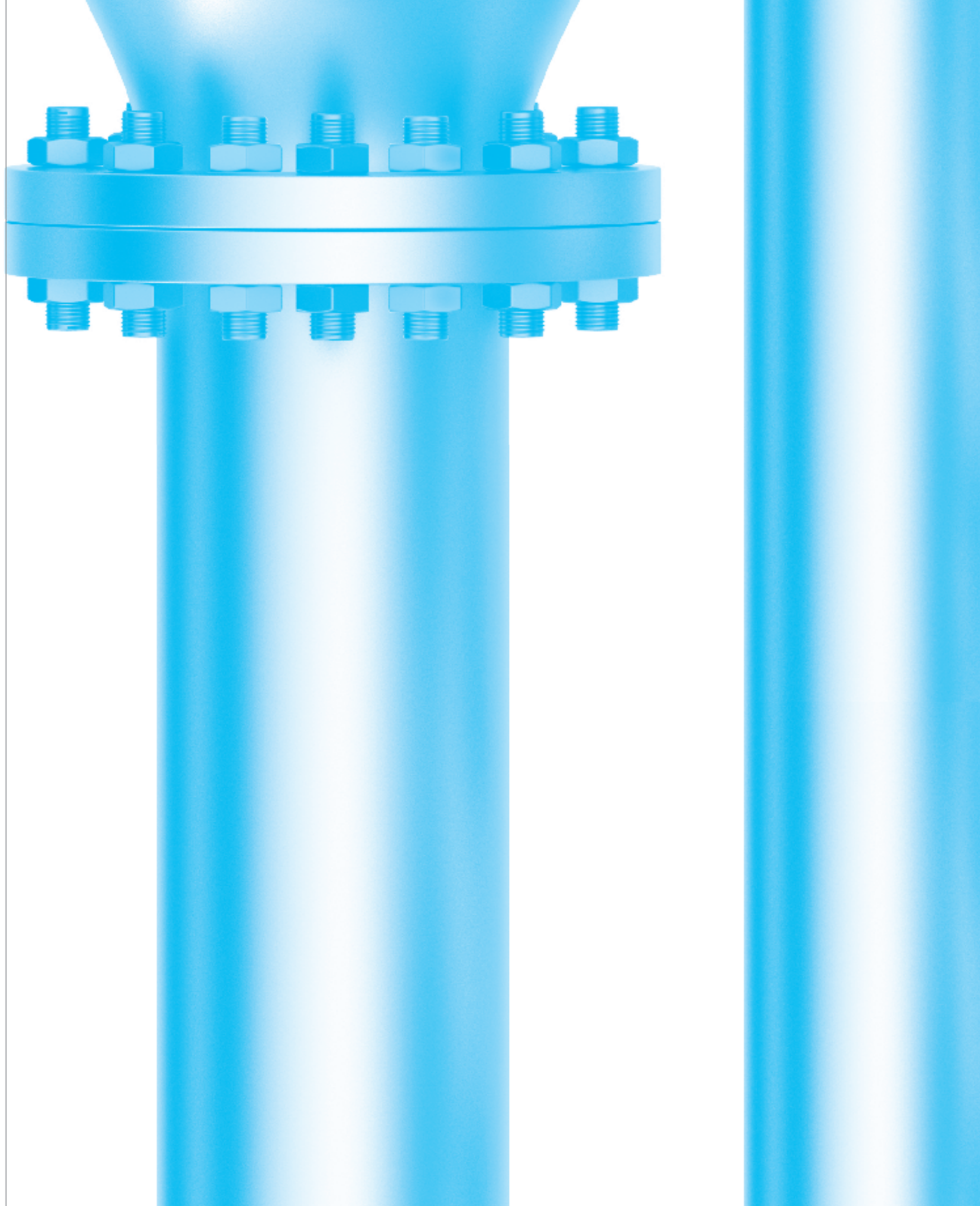

NET4GAS, s.r.o.

Na Hřebenech II 1718/8
140 21 Prague 4 – Nusle
Czech Republic

Tel.: +420 220 221 111
Fax: +420 220 225 498

Email: info@net4gas.cz
Web: www.net4gas.cz